IECEx TEST REPORT COVER

ExTR Reference Number..... :	US/FMG/ExTR12.0028/01	
ExTR Free Reference Number ..... :	3046362_RR203250	
Compiled by + signature (ExTL) .... :	William Holmes	*William P. Holmes*
Reviewed by + signature (ExTL).... :	Cheryl Gagliardi	*Cheryl A. Gagliardi*
Approved by + signature (ExCB) ... :	J. E. Marquedant	*J.E.Marquedant*
Date of issue ..... :	14 September 2016	
Ex Testing Laboratory (ExTL)..... :	FM Approvals LLC	
Address ..... :	1151 Boston-Providence Turnpike, Norwood, MA 02062, USA	
Ex Certification Body (ExCB)..... :	FM Approvals LLC	
Address ..... :	1151 Boston-Providence Turnpike, Norwood, MA 02062, USA	
Applicant's name..... :	StoneL	
Address ..... :	26271 US Hwy 59; Fergus Falls MN 56537 USA	
Standards associated with this ExTR package ..... :	IEC 60079-0 – Ed. 6, IEC 60079-1 – Ed. 6	
Clauses considered ..... :	All clauses considered	
Test procedure ..... :	IECEx System	
Test Report Form Number ..... :	ExTR Cover_5 (released 2014-01)	
Test item description..... :	Limit Switch	
Model/type reference ..... :	Series AX	
Code (e.g. Ex __ II__ T__)..... :	**AXabcSefgh-xxx. Axiom Limit Switch.** *Ex d IIC T5 Ta=-18°C to +50°C Gb* *Ex d IIC T6 Ta=-18°C to +35°C Gb* *IP66 / IP67* a = Function 33S, 44S, 92S, 93S, 94S, 95S, 96S, or 97S. b = Solenoid 11, 1B, 1D, 1E, 1H, 2B, 2D, 2E, or 2H. c = Override X, N, M, or L. e = Enclosure V or T. f = Conduit Entries 02 or 05. g = Visual Indicator R, G, X, 1, or 2. h = Branding A or M. xxx = Options "Special Unit Digits" *Note: 'Special Unit Digits' do not affect the integrity of the housing, the electrical safety, or the title plate.* **AXabcSefgh-xxx. Axiom Limit Switch.** *Ex d IIC T5 Ta=-10°C to +60°C Gb* *Ex d IIC T6 Ta=-10°C to +45°C Gb* *IP66 / IP67* a = Function 33S, 44S, 92S, 93S, 94S, 95S, 96S, or 97S. b = Solenoid 1A or 2A. c = Override X, N, M, or L. e = Enclosure V or T. f = Conduit Entries 02 or 05. g = Visual Indicator R, G, X, 1, or 2. h = Branding A or M. xxx = Options "Special Unit Digits"	

Note: 'Special Unit Digits' do not affect the integrity of the housing, the electrical safety, or the title plate.

AXabcTefgh-xxx. Axiom Limit Switch.
Ex d IIC T5 Ta=-40°C to +80°C Gb
Ex d IIC T6 Ta=-40°C to +65°C Gb

IP66 / IP67

a = Function 33S, 44S, 93S, 94S, or 95S.
b = Solenoid 11, 1B, 1D, 1E, 1H, 2B, 2D, 2E, or 2H.
c = Override X, N, M, or L.
e = Enclosure V or T.
f = Conduit Entries 02 or 05.
g = Visual Indicator R, G, X, 1, or 2.
h = Branding A or M.
xxx = Options "Special Unit Digits"

Note: 'Special Unit Digits' do not affect the integrity of the housing, the electrical safety, or the title plate.

AXabcTefgh-xxx. Axiom Limit Switch.
Ex d IIC T4 Ta=-40°C to +80°C Gb
Ex d IIC T5 Ta=-40°C to +60°C Gb
Ex d IIC T6 Ta=-40°C to +40°C Gb

IP66 / IP67

a = Function 92S, 96S, or 97S.
b = Solenoid 11, 1B, 1D, 1E, 1H, 2B, 2D, 2E, or 2H.
c = Override X, N, M, or L.
e = Enclosure V or T.
f = Conduit Entries 02 or 05.
g = Visual Indicator R, G, X, 1, or 2.
h = Branding A or M.
xxx = Options "Special Unit Digits"

Note: 'Special Unit Digits' do not affect the integrity of the housing, the electrical safety, or the title plate.

Rating..... :

ELECTRICAL RATINGS: 0.1A @ 110-125 VAC 20-125VDC
NAMUR 7-24VDC
2 DI, 2 DO, 1 AI, DeviceNet Module Outputs: 200mA Max total; Messaging: Polling, Cyclic, Change of State; DeviceNet type 100
2 DI, 2 DO, Foundation Fieldbus, Bus Powered Outputs 6.5VDC, 2mA Max
2 DI, 2 DO; Externally Powered Outputs: 160mA Max total;
2 DI, 2 DO,1 AI Module Outputs:200mA Max Total
4 DI, 2 DO, Use AS-i Power Supply; 31.6 VDC max; AS-i Module Outputs: 200mA Max
4 DI, 1 DO, Use AS-i Power Supply; 31.6 VDC max; AS-i Module Outputs: 100mA Max

	AX _ _ _ _ _ _ S (Standard Temp Range)	AX _ _ _ _ _ _ T (Extended Temp Range)
1A 2A	PIEZO VALVE RATINGS (If Installed): ELEC: 6.5 VDC 2mA max PRESS.: 40 to 120psi	N/A
1B 2B	SOLENOID RATINGS (If Installed): ELEC: 24 VDC 1.8W max PRESS.: 40 to 120psi	SOLENOID RATINGS (If Installed): ELEC: 24 VDC 1.8W max PRESS.: 40 to 120psi
1D 2D	SOLENOID RATINGS (If Installed): ELEC: 24VDC 0.5W max PRESS.: 40 to 120psi	SOLENOID RATINGS (If Installed): ELEC: 24VDC .5W max PRESS.: 40 to 120psi
1E 2E	SOLENOID RATINGS (If Installed): ELEC: 12VDC 0.5W max PRESS.: 40 to 120psi	SOLENOID RATINGS (If Installed): ELEC: 12 VDC .5W max PRESS.: 40 to 120psi
1H 2H	SOLENOID RATINGS (If Installed): ELEC: 24 VDC to 120VAC, 0.6W max PRESS.: 40 to 120psi	SOLENOID RATINGS (If Installed): ELEC: 24 VDC to 120VAC, 0.6W max PRESS.: 40 to 120psi

All testing fully performed by ExTL staff at ExTL address above: Yes

Instructions for Intended Use of ExTR Cover:
An ExTR Cover is the sole top-level document to associate together all other parts of an IECEx Test Report (ExTR) package. An ExTR package is comprised of an ExTR Cover and one or more associated ExTR documents (which may include Ex Test Reports, ExTR Addendums and ExTR of National Differences). All ExTR package documents are compiled and reviewed by the ExTL. The Issuing ExCB indicates final approval of the overall ExTR package on this ExTR Cover.

Manufacturer's name ..... : StoneL

Address ..... : 26271 US Hwy 59; Fergus Falls MN 56537 USA

Trademark ..... :

Particulars: Test item vs. Test requirements

Classification of installation and use ..... : stationary

Ingress protection ..... : IP66 / IP67

Rated ambient temperature range (°C) ..... : Varies, See Model Code

General remarks:

The test results presented in this ExTR package relate only to the item or product tested.

- "(see Attachment #)" refers to additional information appended to the ExTR package.
- "(see appended table)" refers to a table appended to the ExTR package.
- Throughout this ExTR package, a point is used as the decimal separator.
- *Where the term "N/A" appears in any part of an ExTR package, it indicates that the associated issue was considered "Not applicable" to the involved evaluation.*
- *In accordance with IECEx 02, a Receiving ExCB may request a sample of the Ex equipment and copies of the documentation referred to in an ExTR Cover.*

The technical content of this ExTR package shall not be reproduced except in full without the written approval of the Issuing ExCB and ExTL.

Copy of Marking Plate:
The marking of the Series AX consists of a stainless steel, etched, and color-filled label attached to the cover using two peened posts. Label area 1 contains the electrical rating information. Label area 2 contains the Model number, Serial number, Date code, manufacturer's name, and manufacturer's address. The variable information is mechanically stamped in the places provided on this label. Label area 3

contains the hazardous location ratings and certification information.

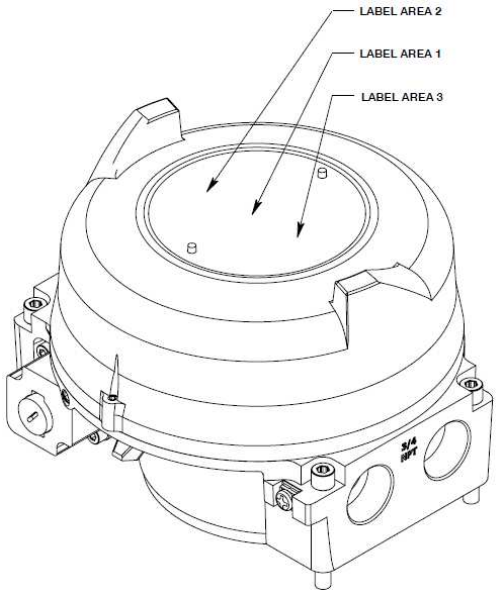

Label 1 - Typical electrical ratings (Function 33S plus Solenoid 1A or 2A) for Label 1 are as follows:

ELECTRICAL RATINGS: 0.1A @ 110-125 VAC
20-125VDC

PIEZO VALVE RATINGS (If Installed):
ELEC: 6.5 VDC 2mA max
PRESS.: 40 to 120psi

Label 2 is one of the following:

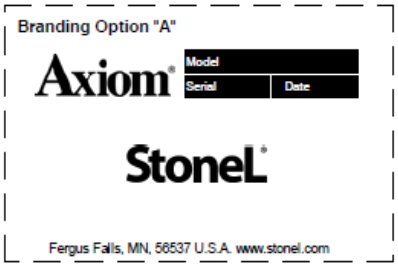

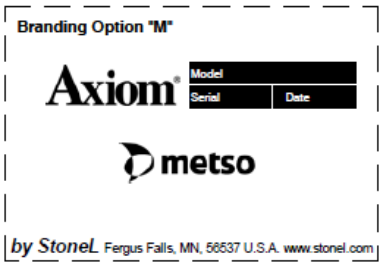

As noted on ExTR/00, Label 3 for the Certification marking is as follows. The ATEX marking has been added and includes the Ex, "II 2 G", CE, and Notified Body number "1725" for FM Approvals Ltd. The ATEX Certificate number "FM12ATEX????X" replaces the IECEx Certificate number "IECEx FMG12.0025X".

Ex II 2 G CE 1725

FM12ATEX0096X

IP66/IP67

Standard Temp "S"

Models using B, D, E, H solenoids
Ex d IIC T5 (Ta = -18°C to +50°C) Gb

Models using B, D, E, H solenoids
Ex d IIC T6 (Ta = -18°C to +35°C) Gb

Models using A solenoid
Ex d IIC T5 (Ta = -10°C to +60°C) Gb

Models using A solenoid
Ex d IIC T6 (Ta = -10°C to +45°C) Gb

Extended Temp "T"

92, 96, 97 modules with B, D, E, H solenoids
Ex d IIC T4 (Ta = -40°C to +80°C) Gb

92, 96, 97 modules with B, D, E, H solenoids
Ex d IIC T5 (Ta = -40°C to +60°C) Gb

92, 96, 97 modules with B, D, E, H solenoids
Ex d IIC T6 (Ta = -40°C to +40°C) Gb

33, 44, 93, 94, 95 modules with B, D, E, H solenoids
Ex d IIC T5 (Ta = -40°C to +80°C) Gb

33, 44, 93, 94, 95 modules with B, D, E, H solenoids
Ex d IIC T6 (Ta = -40°C to +65°C) Gb

NOTE: IN AMBIENT TEMP OVER 64°C USE FIELD WIRING RATED 90°C OR GREATER. IN AMBIENT TEMP OVER 74°C USE FIELD WIRING RATED 100°C OR GREATER

WARNING: DO NOT OPEN WHEN AN EXPLOSIVE ATMOSPHERE IS PRESENT. TO REDUCE THE RISK OF ELECTROSTATIC SPARKING. THE EQUIPMENT SHALL BE CLEANED ONLY WITH A DAMP CLOTH.

WARNING: APPLICATION IN ATMOSPHERES CONTAINING CARBON DISULPHIDE (CS2) IS NOT PERMITTED.

WARNING: CONSULT THE MANUFACTURER IF DIMENSION INFORMATION ON THE FLAMEPROOF JOINTS IS NECESSARY.

General remarks:

1. Original Test Data filed under Project Data Record 3040591 and Project Data Record 3046362.

General product information:

General - The Axiom Series AX Limit Switch is a valve communication and control device for quarter-turn pneumatic valves. Internally mounted pilot valves control a main flow spool valve to operate the pneumatic valve to which this product is intended to be attached. The control modules and up to two pilot valves are housed inside a single flameproof compartment. All pneumatic lines are provided with flame arrestors and the enclosure is vented through additional flame arrestors.

Construction - The material of the base and all covers are fabricated from either aluminum alloy A356.0-T61 with an Mg content < 0.45% of stainless steel casting alloy CF3M. Each cover is prevented from being inadvertently opening with an M4 set-screw that locks the cover to the base.

Threaded entries – Either two ¾-14 NPT or two M25 threaded entries can be provided. The thread form is identified on the housing adjacent to the threaded entries.

Gaskets and Seals – Buna-N o-ring seals are employed to provide IP66 / IP67 ingress protection.

Details of change (applicable only when revising an existing ExTR package):

Various documentation updates related to flame arrestor, and component changes. Changes also include labelling and manual updates.

In accordance with OD 024, testing not fully performed by ExTL staff at the above ExTL address:

N/A

National differences considered as part of this evaluation, if any:

N/A

"Specific Conditions of Use" for Ex Equipment or "Schedule of Limitations" for Ex Components, if any:

1. To minimize the risk of electrostatic sparking, the equipment shall be cleaned only with a damp cloth.
2. Consult the manufacturer if dimensional information on the flameproof joints is necessary.
3. Application in atmospheres containing Carbon Disulphide (CS_2) is not permitted.

Routine tests, if any:
No routine tests are required.

Manufacturer's Documents

Title:	Drawing No.:	Rev. Level:	Date:
Model Description, Axiom AX Series, IECEx Ex d	000176	A	2012-08-16
Critical Documents, Axiom AX Series, IECEx Ex d	000177	~~A~~ C	~~2012-08-16~~ 2015-10-15
Enclosure Information, Axiom AX series	105305	C	2011-03-16
Electrical Information, Axiom AX series	105306	A	2011-10-24
AX33 series IMO	105328	~~A~~ B	--
AX44 series IMO	105329	A	--
AX92 series IMO	105330	~~A~~ B	--
AX93 series IMO	105331	A	--
AX94 series IMO	105332	A	--
AX95 series IMO	105333	A	--
AX96 series IMO	105334	A	--
AX97 series IMO	105335	~~A~~ B	--
Product Marking, Axiom AX Series, IECEx Ex d	105343	A	2012-08-16
Installation & Adjusting Instructions Addendum	105344	A	--
Axiom AX Series, External Visual Indicator	105349	A	2012-08-16
Anodizing Specification, QX and AX	110027	A	2008-01-24
PAINT SPEC AX ENCLOSURE	110032	A	2012-04-13
Schematic, FF CPU/MAU Board	200044	F	2004-10-20
Schematic, Modbus (95)	200049	F	2010-03-22
Schematic, Foundation Fieldbus 94, Mother	200054	D	2009-02-02
Schematic, MAC36 Solenoid	200062	C	2008-02-20
Schematic, Axiom Asi	200081	C	2009-08-31
Schematic, Axiom, FF 93 Motherboard	200082	C	2009-04-08
Schematic, sensor board, axiom	200085	E	2012-02-22
Schematic, Axiom SST w/ uC, low cost	200086	H	2011-10-31
Schematic, Axiom Namur	200093	E	2008-09-22
Schematic, Axiom, Bus communications Interface	200100	C	2005-09-20
Schematic, Axiom dual solenoid SST	200103	C	2011-10-27
Schematic, Axiom dual solenoid, Universal driver	200104	B	2011-10-27
Schematic, Devicenet	200186	A	2010-08-17
FLAME ARRESTOR AX	409135	~~A~~ D	~~2010-05-03~~ 2013-08-20
Block, terminal, Beau, 10 pt.	414720	B	2002-05-30
Block, Terminal, 4 Point PBC Mount	414722	A	2011-06-22
Block, Terminal, Beau 8 Pt.	414724	B	2002-05-30
FF, CPU/MAU Board, Unpopulated	418074	C	2002-02-18
FF, CPU/MAU Board, Populated	418075	~~K~~ L	~~2011-12-19~~ 2014-01-15
Modbus, Unpopulated.	418089	~~E~~ F	~~2010-03-23~~ 2013-01-09

Title:	Drawing No.:	Rev. Level:	Date:
Modbus, Populated	418090	~~K~~ L	~~2010-03-23~~ 2013-01-09
Board, Foundation Fieldbus 94, Mother, Unpopulated	418120	~~E~~ F	~~2009-06-22~~ 2012-11-26
Board, Foundation Fieldbus 94, Mother, Populated	418121	~~J~~ N	~~2009-12-21~~ 2013-12-16
Board, Axiom, Asi, unpopulated	418197	D	2011-07-29
Board, Axiom, Asi, populated	418198	~~D~~ E	~~2011-07-29~~ 2013-04-26
Board, Axiom, FF 93 Motherboard, unpopulated	418199	C	2009-04-08
Board, Axiom, FF 93 Motherboard, populated	418200	~~G~~ I	~~2012-03-07~~ 2013-12-17
Board, sensor board, axoim, unpopulated	418206	E	2012-02-22
Board, sensor board, axoim, populated	418207	E	2012-02-22
Board, Axiom SST, low cost, unpopulated	418208	I	2011-10-31
Board, Axiom SST, low cost, populated	418209	P	2011-10-31
Board, Axiom Namur, unpopulated	418215	~~E~~ F	~~2008-09-22~~ 2014-09-08
Board, Axiom Namur, populated	418216	~~G~~ H	~~2008-09-22~~ 2014-09-08
Board, Axiom, Bus Interface, unpopulated	418219	C	2005-09-20
Board, Axiom, Bus Interface, populated	418220	E	2010-12-23
Board, membrane switch pad, 2 Buttons, 3 LEDs, Axiom	418223	E	2009-09-03
Board, Axiom dual solenoid, SST, unpopulated	418226	D	2011-1027
Board, Axiom dual solenoid, SST, populated	418227	~~H~~ I	~~2011-10-27~~ 2012-08-01
Board, Axiom dual solenoid, solenoid driver, unpopulated	418228	C	2011-10-27
Board, Axiom dual solenoid, solenoid driver, populated	418229	F	2011-10-27
Board, Membrane, Axiom, Expeditor	418264	~~C~~ D	~~2009-09-03~~ 2014-04-10
Board, Unpopulated, MAC36 Coil	418299	A	2007-07-18
Board, Populated, MAC35 Coil	418300	B	2008-02-19
Board, DeviceNet, Unpopulated	418378	~~A~~ B	~~2010-08-11~~ 2013-02-05
Board, DeviceNet, Populated, Dual Module	418379	~~D~~ E	~~2012-02-24~~ 2013-02-05
Urethane potting, Conathane EN-14 black, mixed (qty. in cc)	432029	A	2003-05-01
Component, Isolation Inductor,ASi	434092	-	1998-04-02
Inductor, Isolation AS-i Ext Addr	434218	A	2011-11-23
Resistor, 9.1 Ohm, 5%, 1210	434219	A	2011-11-23
CONNECTOR, BOARD STACKER 0.705", 10PIN, 0.05" PITCH	434253	A	2010-12-15
CONNECTOR, BOARD STACKER 0.425", 10PIN, 0.05" PITCH	434254	A	2010-12-14
Fuse, 0.032A 5x20mm	434272	A	2011-11-23
Piezo Valve, Hoerbiger No PS11001-630A, Onyx Pilot	443014	B	2003-04-22
Solenoid Valve, MAC36, 12VDC, 1/2W, MOD 7628	443022	D	2008-12-08
Solenoid Valve, MAC36, 24VDC, 1/2W, MOD 7627	443023	D	2008-12-08
Solenoid Valve, I.S. MAC36, 12VDC, 1/2W, W/ (MOD 7615)	443025	B	2008-12-08
Solenoid Valve, MAC36, 12VDC, 1/2W, MOD 7630 (Wide Temp)	443026	D	2008-12-08
Solenoid Valve, MAC36, 24VDC, 1/2W, MOD 7629 (Wide Temp)	443027	D	2008-12-08
Solenoid Valve, I.S. MAC36, 12VDC, 1/2W, MOD 7616 (Wide Temp)	443029	B	2008-12-08
Solenoid Valve, MAC36, 24VDC, 1.8W (MOD. 7626)	443030	D	2008-12-08
Solenoid Valve, MAC36, 24VDC, 1.8W, Wide Temp, MOD 7635	443038	B	2008-12-08