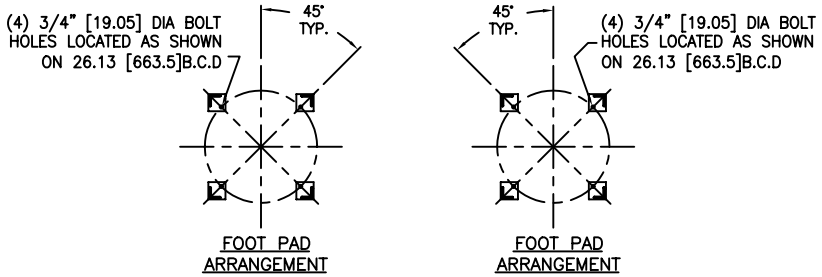

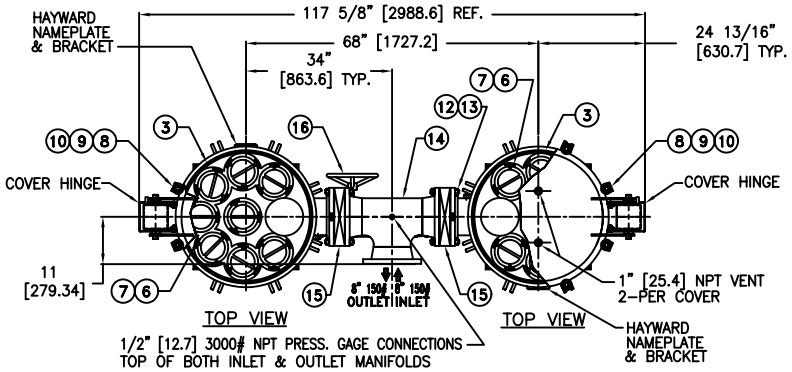

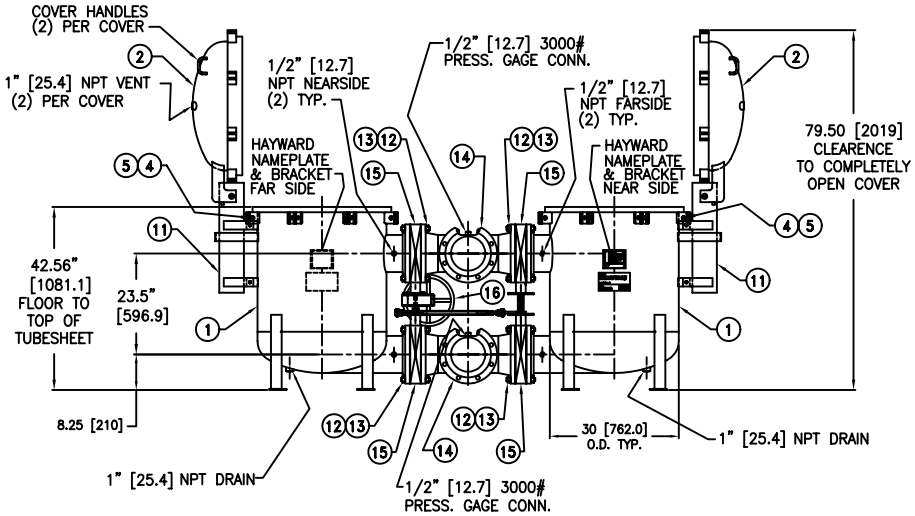

ITEM	PART NAME	MATERIAL
1	BODY	SA240-316/316L
2	COVER	SA240-316/316L
3	O-RING	BUNA-N
4	PIN	SA193 B7 ZINC PL
5	SNAP RING	STEEL ZINC PL
6	BASKET RESTRAINER	316 SS
7	FILTER BAG RETAINER	316 SS
8	EYE BOLT	SA193 B7 ZINC PL
9	HEX NUT	SA194 2H ZINC PL
10	WASHER	STEEL ZINC PL
11	SPRING ASSISTED MECHANISM	STAINLESS STEEL
12	MANIFOLD STUDS	SA193 B7 ZINC PL
13	MANIFOLD HEX NUTS	SA194 2H ZINC PL
14	MANIFOLDS (INLET & OUTLET)	316 SS
15	8" BUTTERFLY VALVES (SEE NOTE 7)	
16	GEAR OPERATOR & LINKAGE (SINGLE ACTING)	CARBON STEEL

NOTES:

1. UNITS ARE TO BE DESIGNED, FABRICATED & "U" STAMPED IN ACCORDANCE WITH ASME SECT. VIII,DIV. 1 BOILER & PRESSURE VESSEL CODE, IN COMPLIANCE TO LATEST ADDENDA.
2. INLET / OUTLET FLANGE CONNECTIONS PER ANSI B 16.5.
3. DESIGN PRESSURE: 150 PSI (MAWP) [10.34 BAR]
   DESIGN TEMPERATURE 250° F. [121° C]
   MDMT – –20° F @ 150 PSI [–28.9° C @ 10.34 BAR]
4. ALL DIMENSIONS ARE IN INCHES & [MILLIMETERS]
5. ALL BOLT HOLES ARE TO STRADDLE NATURAL CENTERLINES.
6. APPROX. WEIGHT (DRY) 1859 LBS [693.8 kgs]
7. 8" BUTTERFLY VALVES WAFER STYLE:
   BRAY SERIES 30
   BODY-DUCTILE IRON
   DISC & STEM-SSTL
   SEATS-EPDM
8. PAINT CARBON STEEL PER HAYWARD STANDARD ES-301.

CERTIFIED FOR:
P.O. NO.:
REG. NO.:
VESSEL CODE: DMBF-0802-AB10-080A-UT-11HE-VAL-LINK
HAYWARD PART NO.: F3AV0800300-B

EATON FILTRATION, LLC
900 FAIRMOUNT AVENUE, ELIZABETH, NEW JERSEY 07207

NAME: DMBF-0802 DUPLEX FILTER VESSEL 8" 150# INLET/ TANG. OUTLET TYPE HE STAINLESS STEEL

DRAWN	DATE	CERT.	DATE
FJM	07/23/03	LH	07/23/03

SIZE	DWG NO	REV
B	DHE0808TS-B	B

ELECTRONIC FILE NAME: DHE0808TS-B
REF. ECR D656 DATE 01/11/06

UNAUTHORIZED USE, MANUFACTURE OR REPRODUCTION IN WHOLE OR IN PART IS PROHIBITED. DRAWING, DESIGN AND OTHER DISCLOSURES PROPERTY OF EATON FILTRATION, LLC