Redapt certified accessories for hazardous areas

Threaded Solutions for Hazardous area locations

EATON

Powering Business Worldwide

Global Termination Solutions

Eaton provides a termination solution for virtually every cable type used in hazardous and industrial environments – both onshore and offshore and above and below ground. Our adaptors, reducers, plugs, drains and additional products are used to support hazardous area installations throughout the world, enhancing safety and productivity in the most severe environmental conditions.

Our thread conversion products are designed for strict adherence to global specifications, meeting international approvals including ATEX, IECEx and CSA certifications. Our products are also suitable for industries made hazardous by the presence of dust.

Eaton's thread conversion products are the safest solution for your hazardous area installation.
In oil and gas, mining or power generation installations, our products are the reliable and safe way to terminate cable and conduit installation.

Global Support & Manufacturing

Eaton manufactures in five continents and sells into more than 175 countries. We have dedicated sales support in every major location with local technical sales and engineering teams to support your immediate needs. As one of the largest oil and gas bulk electrical and instrument material suppliers, we can easily provide you a single source for all the components to complete your project on time and on budget.

EATON
Powering Business Worldwide

Aldridge, our manufacturing site in UK

History and experience for hazardous areas

- The main office for Raxton and Redapt products
- 50 employees
- 10 million of units produced per annum
- Departments: metal turning, sales support/project management, sourcing/supply chain, international sales and warehousing

A few key dates

1950 - First industrial cable gland
Named "P32", it replaces the tow around the electric cable.

1972 - Raxton is founded
Raxton established as a thread conversion business for hazardous areas and industrial applications in 1972.

1979 - Foundation of Redapt
Specialized in Ex and named after its core product range REducers and aDAPTors.

1988 - First ATEX approved cable gland
Redapt launches its first ATEX cable gland in 1988, adding to the ATEX adaptors and plugs product ranges already available.

2012 - Arrival of Eaton
Following previous integration into Cooper Industries (1999 for CA-PRI-CODEC and 2010 for Redapt and Raxton). All three brands are brought into the international group Eaton which in 2020 has sales of $17.9 billion. We offer one of the largest and most comprehensive ranges of conduits, cable and wire management products on the market today.

2019 - Aldridge granted Fit For Nuclear status

Eaton Electrical System Ltd (Aldridge) granted Fit For Nuclear status by Nuclear AMRC (Nuclear Advanced Manufacturing Research Centre).

This status rewards UK manufacturers that meet the standards demanded by the nuclear industry's top tiers.

Eaton takes pride in demonstrating a capability to support the needs of the global nuclear industry and providing high-quality products for all nuclear sectors including new build, operations and decommissioning.

Discover our manufacturer page on F4N Connect **here**

F4N Fit For Nuclear

Contents

Product selection guide

When selecting Ex certified accessories for use in hazardous areas, it is important to ensure that the product selected not only performs the task required (i.e. adapting the thread), but also maintains the overall integrity of the equipment into which it will be fitted.

To help with the selection of Redapt products, we have prepared the following as a guide. However, when selecting equipment for use in hazardous areas, the appropriate national or international standards or codes of practice must be considered.

Product approvals (see page 8)
Redapt products are manufactured to comply with the relevant standards for which they are designed. This means Redapt products meet with the exacting standards found within hazardous area environments. To assist in ease of use, the Redapt range of adaptors, reducers, stopping plugs and breather drains are approved Exd I and IIC and Exe I and IIC and tested to IP66 and IP68.

Equipment certificates, Ex thread adaptors and Ex stopping plugs
Redapt adaptors and reducers with metric female threads (Ex adaptors) and full range of stopping plugs (Ex stopping plugs) and breather drains are certified as apparatus and granted equipment certificates. This means that they can be fitted into Ex apparatus enclosures without further certification.

Component certificates
Redapt adaptors and reducers with non-coaxial threads, 90 degree adaptors, 'Y' and 'T' (twin inlet) adaptors and 90 degree swivel adaptors are certified as components, and as such require further consideration before they can be fitted to Ex apparatus enclosures. This applies to all products that have a 'U' at the end of the certificate number.

Worldwide compatibility
Keeping pace with the rapidly changing approvals and to ensure worldwide compatibility, Redapt has the following-approvals: North American Ex approvals for both methods of hazardous location classification, Zones (NEC505) and Divisions (NEC500) as well as CECin addition to our existing ATEX and IECEx approvals. Redapt can therefore offer adaptors and reducers Ex d and e I M2 and IIC Gb and/or Class I, Division 1, groups A, B, C, D, or Exe II, Class I, Division 2, plus Class I Zone 1 & 2; AEx db and AEx eb

Ingress protection (see page 9)
To ensure that the ingress protection of the equipment is maintained, the accessories need to satisfy the same level of protection as the equipment. The Redapt Exd I and IIC and Exe I and IIC range of adaptors, reducers, stopping plugs and breather drains are fitted with an integral O-ring seal and have been independently tested to IP66 and IP 68.

Material
To ensure the long-term integrity of the installation, care should be taken in selecting the product material; in particular, taking into account any corrosive atmosphere present and/or the potential for corrosion brought about by mating dissimilar metals. As standard we supply brass, which is suitable for most applications. In certain atmospheres, most notably ammonia, or to avoid bi-metallic corrosion and electrolytic action, it may be advisable to select an alternative material or request plated brass.

Thread fit, gauging and length
Parallel threads are gauged to a medium fit (6g, 6H) and are manufactured to provide a minimum of eight full threads, unless otherwise specified. Tapered threads are gauged and dimensioned to provide for five fully engaged threads, unless otherwise specified.

Part numbering system (see pages 10 to 12)
When ordering or enquiring about adaptors and reducers, the male thread size should always be quoted first, followed by the female.

Dimensions
It is advisable to check the dimensions of the product to ensure that it can be installed into the equipment without fouling. Dimensions are given in the catalogue for regular metric size products; for other dimensions or information, please contact us. *Please note that dimensions are subject to change.*

Product marking
To ensure clarity the relevant product information is marked on the product, and/or shown on the packaging and/or within the installation instructions.

European directives
Products approved within the ATEX directive will be shipped with detailed installation instructions. The CE mark is applied to the packaging and confirms that Redapt products meet with the essential health and safety requirements of the applicable European directives.

Redapt products are outside the scope of the Electromagnetic Compatibility Directive (EMC) as they are passive.

Product type

		UKCA	IECEx	ATEX Gas & Dust	ATEX Mining (M2 only)	North America	Russia	India	Brazil
Adaptors and reducers (metallic)		■	■	■	■	■	■	■	■
Swivel adaptors		■	■	■	■		■		■
'Y' adaptors 'T' adaptors		■	■	■	■		■		■
90 degree adaptors		■	■	■		■	■		■
Nylon stopping plugs		■	■	■		■	■		■
Male to male and female to female (IECEx only) adaptors		■	■	■	■	■	■		■
Insulated adaptors		■	■	■					
Unions		■	■	■	■	■	■		■
Stopping plugs (metallic) (check individual plugs for certification)		■	■	■	■	■	■	■	■
Breather drains Exe		■	■	■	■	■	■		■
Breather drains Exde		■	■	■	■		■		■
Earth lead adaptors		■	■	■	■	■	■		■

For details please refer to certificates

Product approvals

ATEX directive compliance

The ATEX directive (2014/34/UE) applies to equipment and protective systems intended for use in potentially explosive atmospheres within Europe. The directive outlines the conformity assessment procedures and product classification for Ex products.

Redapt complies with ATEX having had an EC type-examination carried out on our Ex product range and our production QA assessed and approved. This is in line with the requirements for Ex products for use in gas groups I and II.

North American approval

The Canadian Standards Association (CSA) develops standards, tests and certifies products for use in Canada and internationally. CSA international is recognised by the U.S. Occupational Safety and Health Administration (OSHA) under the Nationally Recognised Testing Laboratory (NRTL) scheme and are able to test and certify products for use in hazardous locations within the U.S.A. as well as Canada. Traditionally, Ex products used within North America have been designed and tested for compliance within the 'class and division system'.

Redapt products have been assessed and certified for use throughout North America in both the 'class and division system' (NEC500) and the 'zone system' NEC505.

IEC Ex approval

The International Electrotechnical Commission (IEC) has developed the IECEx international certification scheme in an attempt to harmonise national standards used throughout the world with the aim of producing an approval that is recognised globally. The IECEx scheme is based on the 3 zone concept of area classification.

Redapt products have been approved under the IECEx scheme and are compliant with the requirements of the scheme via IEC 60079-x.

TR-UNION approval

The EX EAC certificate and the regulation for equipment used in potentially explosive atmospheres, therefore classified explosion proof, is based on the Technical Regulations 012/2011 of the Eurasian Customs Union (TR CU 012/2011). The Custom Union Technical Regulations regulate the quality of the product on the markets of Russia, Belarus, Kazakhstan and soon of Armenia and Kyrgyzstan. The certificate resulting from the compliance with the provisions of the TR CU 012/2011 is the EX EAC certificate, comparable to European ATEX.

Indian Hazardous Location system

Requirement under Rule 102 of the Petroleum Rules, 2002 lays down that no electrical wiring shall be installed and no electrical apparatus shall be used in petroleum refinery, storage installation, storage shed, service station or any other place where petroleum is refined, blended, stored, loaded/filled or unloaded unless it is approved by the Chief Controller of Explosives (CCoE certificate). It is in this context that electrical equipment which has to be used in a hazardous area covered under Petroleum Rules, 2002 shall require approval from the Chief Controller of Explosives.

INMETRO

The National Institute of Metrology, Standardization and Industrial Quality (INMETRO) is a Brazilian federal autarchy, that certify electrical and electronic products. INMETRO acts as Executive Secretariat of the National Council of Metrology, Standardization and Industrial Quality (CONMETRO), an inter-ministerial collegiate entity which is the normative agency of the National System of Metrology, Standardization and Industrial Quality (SINMETRO).

Hazardous area standards generally state a minimum IP rating of IP54 or NEMA 3 for degree of protection against solid foreign objects and against water. However, it is essential when selecting Redapt products to ensure that the product will maintain the IP or NEMA rating of the equipment and the integrity of the installation.

The following table contains definitions detailing the environmental protection levels that Redapt products are capable of maintaining:

IP codes are based on the IEC standard dust/water 50269 – degrees of protection provided by enclosures

1st numeral – protection against solid objects

2nd numeral – protection against water

IP54
- Dust protected. Prevents ingress of dust sufficient to cause harm.
- Protected from splashing water from any direction.

IP66
- Dust-tight. No ingress of dust possible.
- Protected against heavy seas or powerful jets of water. Prevents ingress sufficient to cause harm.

IP67
- Dust-tight. No ingress of dust possible.
- Protected against harmful ingress of water when immersed between a depth of 150mm to 1m.

IP68
- Dust-tight. No ingress of dust possible.
- Protected against submersion. Suitable for continuous immersion in water at stated depth. (Depth stated for Redapt products = 2m for 60 minutes duration)

North American and Canadian markets define environmental protection as CSA and NEMA enclosure types

Type 3
- Type 3 enclosures are intended for outdoor use primarily to provide a degree of protection against rain, sleet, windblown dust and damage from external ice formation.

Type 4
- Type 4 enclosures are intended for indoor or outdoor use primarily to provide a degree of protection against wind blown dust and rain, splashing water, hose directed water and damage from external ice formation.

Type 4X
- Type 4X enclosures are intended for indoor or outdoor use primarily to provide a degree of protection against corrosion, wind blown dust and rain, splashing water, hose directed water and damage from external ice formation.

Type 6
- Type 6 enclosures are intended for indoor or outdoor use primarily to provide a degree of protection against hose directed water, the entry of water during occasional temporary submersion at a limited depth and damage from external ice formation.

Type 6P
- Type 6P enclosures are intended for indoor or outdoor use primarily to provide a degree of protection against hose directed water, the entry of water during prolonged submersion at a limited depth and damage from external ice formation.

Integral O-rings available

- Silicone
- Nitrile
- Neoprene
- Fluorosilicone
- EPDM
- Viton

Part numbering system

Codes

Page No.	Product	Digits 1 & 2
Adaptors and reducers		
14-17	**AD**	Adaptor
14-17	RD	Reducer
18	TA	Swivel - in-line male to female
18	TC	Swivel - in-line female to female
18	TD	Swivel - in-line male to male
18	TP	Swivel - 90° male to female
18	TQ	Swivel - 90° female to female
18	TR	Swivel - 90° male to male
19	AY	'Y' adaptor
20	AT	'T' adaptor
21	AR	90° adaptor
22	AM	Male to male adaptor
23	AF	Female to female adaptor
24-25	DB	Insulated adaptor
Stopping Plugs		
26-27	PD	Dome head plug
28	PA	Type A plug
28	PB	Type B plug
Breather Drains		
31	DP	Breather drain (Exe)
32	BD	Breather drain (Exde)
Other products		
34	UN	Union - male to female
34	UF	Union - female to female
35	AE	Earth lead adaptor

Certification	Digit 3
U	Exd I and IIC & Exe I and IIC
D	Exd I and IIC
E	Exe I and IIC
F	Industrial (marked product)

Material	Digit 4
1	Brass
2	Mild steel
3	Stainless steel
4	Glass filled nylon
5	Aluminium
6	Nylon 6
7	Red fibre

Plating	Digit 5
0	Unplated
1	Electroless nickel
2	Zinc
6	Chromated

Example

Digits 1 & 2		Digit 3		Digit 4		Digit 5		Digits 6 & 7		Digits 8 & 9
AD	-	**U**	-	**1**	-	**1**	-	**29**	-	**04**
Adaptor		Exd/e certified		Brass		Nickel-plated		1/2" NPT (male)		M20 (female)

Always quote male thread first.

For information on our non-certified accessories, please consult the **Raxton thread form conversion accessories** webpage.

For information on our flexible conduits, please consult the **Flexible conduits** webpages.

Male thread – digits 6 & 7, female thread – digits 8 & 9 Note: threadform codes below to be used for both male and female threads.

Metric	ET imperial conduit	NPT	NPSM	ISO pipe parallel (BSPP)	ISO pipe taper (BSPT)	PG
03 M16	17 ⅝″ ET	**29 ½″ NPT**	42 ½″ NPSM	55 ½″ BSPP	68 ½″ BSPT	79 PG7
04 M20	18 ¾″ ET	30 ¾″ NPT	43 ¾″ NPSM	56 ¾″ BSPP	69 ¾″ BSPT	80 PG9
05 M25	19 1″ ET	31 1″ NPT	44 1″ NPSM	57 1″ BSPP	70 1″ BSPT	81 PG11
06 M32	20 1¼″ ET	32 1¼″ NPT	45 1¼ ″ NPSM	58 1¼″ BSPP	71 1¼″ BSPT	82 PG13.5
07 M40	21 1½″ ET	33 1½″ NPT	46 1½″ NPSM	59 1½″ BSPP	72 1½″ BSPT	83 PG16
08 M50	22 2″ ET	34 2″ NPT	47 2″ NPSM	60 2″ BSPP	73 2″ BSPT	84 PG21
09 M63	23 2½″ ET	35 2½″ NPT	48 2½″ NPSM	61 2½″ BSPP	74 2½″ BSPT	85 PG29
10 M75	24 3″ ET	36 3″ NPT	49 3″ NPSM	62 3″ BSPP	75 3″ BSPT	86 PG36
11 M80 x 2.0	ET Special	37 3½″ NPT	50 3½″ NPSM	63 3½″ BSPP	76 3½″ BSPT	87 PG42
12 M85 x 2.0		38 4″ NPT	51 4″ NPSM	64 4″ BSPP	77 4″ BSPT	88 PG48
13 M90 x 2.0		NT Special	NS Special	BP Special	BT Special	PG Special
14 M100 x 2.0						
15 M110 x 2.0						
BZ M120 x 2.0						
MT Special						

Part numbering system for DPE breather drains only (page 27)

Product	Certification	Material	Plating	Thread type	Thread length	Hole position	Castellated l/nut
DP Standard	**E** Exe I and IIC	1 Brass	**0** Unplated	**04** M20	**S1** HDPE filter 10mm	2 Holes	With
		3 S/steel	1 E/nickel	05 M25	S2 HDPE filter 10mm	2 Holes	Without
		4 GF Nylon	2 Zinc	06 M32	S2 HDPE filter 15mm	3 Holes	With
				29 ½″ NPT	S4 HDPE filter 15mm	3 Holes	Without
				30 ¾″ NPT	M1 Metallic filter 10mm	2 Holes	With
				31 1″ NPT	M2 Metallic filter 10mm	2 Holes	Without
					M3 Metallic filter 15mm	3 Holes	With
					M4 Metallic filter 15mm	3 Holes	Without

Note: Glass filled nylon version is only available in S3 and S4 options and is supplied complete with a brass castellated locknut.
NPT threaded breather drains are only available in S3 and S4 options.

Example

Standard	Exe I and IIC	Stainless steel	Unplated	M20	10mm
DP -	**E** -	**3** -	**0** -	**04** -	**S1**

Part numbering system for BDU breather drains only (page 28)

Product	Certification	Material	Plating	Thread	O-ring
BD Standard	**U** Exd I and IIC and Exe I and IIC	1 Brass	**0** Unplated	**04** M20	D0 no O-ring
		3 Stainless steel	1 Electroless nickel	05 M25	**D1** Silicone
			2 Zinc	29 ½″ NPT	D2 Fluorosilicone
				30 ¾″ NPT	D3 Viton
					D4 EPDM
					D5 Neoprene
					D6 Nitrile

Example

Standard	Exd I and IIC and Exe I and IIC	Stainless steel	Unplated	M20	Silicone O-ring
BD -	**U** -	**3** -	**0** -	**04** -	**D1**

Thread dimension chart

ISO metric

BS 3643 1.5mm pitch		
Size	**Major dia.**	**TPI**
M16	15.97	16.93
M20	19.97	16.93
M25	24.97	16.93
M32	31.97	16.93
M40	39.97	16.93
M50	49.97	16.93
M63	62.97	16.93
M75	74.97	16.93
2.0mm pitch		
M80	79.97	12.70
M85	84.97	12.70
M90	89.97	12.70
M100	99.97	12.70
M110	109.97	12.70
M120	119.97	12.70

NPT

ANSI.ASME B1.20.1		
Size	**Pipe dia.**	**TPI**
½″	21.34	14.00
¾″	26.67	14.00
1″	33.40	11.50
1¼″	42.16	11.50
1½″	48.26	11.50
2″	60.33	11.50
2½″	73.03	8.00
3″	88.90	8.00
3½″	101.60	8.00
4″	114.30	8.00

PG

BS 3643 1.5mm pitch		
Size	**Major dia.**	**TPI**
PG7	12.50	20.00
PG9	15.20	18.00
PG11	18.60	18.00
PG13.5	20.40	18.00
PG16	22.50	18.00
PG21	28.30	16.00
PG29	37.00	16.00
PG36	47.00	16.00
PG42	54.00	16.00
PG48	59.30	16.00

Alternate ISO pipe thread designations

BS 3643 1.5mm pitch	
UK	**BSP P**arallel or **T**aper BS2279 (BS21)
Europe	**G** (Parallel) **GK** (Taper) **R** (Parallel) **RK** (Taper)
Japan	**PF** (Parallel) JIS B 303
CIS	**K mpy** (Taper)

BSP ISO pipe thread

ISO R/7; UNI 6125		
Size	**Pipe Dia.**	**TPI**
⅜″	16.66	19.00
½″	20.96	14.00
¾″	26.44	14.00
1″	33.25	11.00
1¼″	41.91	11.00
1½″	47.80	11.00
2″	59.61	11.00
2½″	75.18	11.00
3″	87.88	11.00

ET imperial conduit

BS31		
Size	**Major dia.**	**TPI**
⅝″	15.88	18.00
¾″	19.05	16.00
1″	25.40	16.00
1¼″	31.75	16.00
1½″	38.10	14.00
2″	50.80	14.00
2½″	63.50	14.00
3″	76.20	14.00

Thread dimension substitution chart

Metric	NPT (or NPS)	PG	BSP ISO Pipe	ET
M16	–	7, 9	–	⅝″
M20	½″	11, 13.5	½″	¾″
M25	¾″	16	¾″	1″
M32	1″	21	1″	1¼″
M40	1¼″	29	1¼″	1½″
M50	1½″	36	1½″	2″
M63	2″	42, 48	2″	2½″
M75	2½″	–	2½″	3″
M90 x 2.0	3″	–	3″	–
M100 x 2.0	3½″	–	–	–
M110 x 2.0	–	–	–	–
M120 x 2.0	–	–	–	–

STEP 1 – To obtain the correct reference number, select the male size from the left hand column, then refer horizontally across the page to the female size (i.e. M32 (male) x M40 (female) = 208). Reference numbers in blue are adaptors; other references are reducers.

Female Size

	Metric														NPT										PG								
Male	M16	M20	M25	M32	M40	M50	M63	M75	M80	M85	M90	M100	M110	M120	1/2"	3/4"	1"	1 1/4"	1 1/2"	2"	2 1/2"	3"	3 1/2"	4"	PG7&9	PG11	PG13.5	PG16	PG21	PG29	PG36	PG42	PG48
M16	201	201													216										201	201	201						
M20	301	202	203												217	218									301	202	202	202	204				
M25	303	303	257	206											303	219	221								303	303	303	257	204				
M32	305	305	305	206	208										305	305	221	223							305	305	305	305	207	258			
M40	307	307	307	307	208	209									307	307	307	223	224						307	307	307	307	307	208	209		
M50	309	309	309	309	309	259	211								309	309	309	309	225	226					309	309	309	309	309	309	210	210	211
M63	310	310	310	310	310	310	211	212							310	310	310	310	310	226	227				310	310	310	310	310	310	310	310	211
M75	311	311	311	311	311	311	311	212	261	213	213				311	311	311	311	311	311	360	228			311	311	311	311	311	311	311	311	311
M80	311	311	311	311	311	311	311	261	261	214	214																						
M85	312	312	312	312	312	312	312	214	214	214	214																						
M90	312	312	312	312	312	312	312	312	214	214	214	215			312	312	312	312	312	312	312	229	230	231									
M100	313	313	313	313	313	313	313	313	313	313	215	215	262	263	313	313	313	313	313	313	313	313	230	231									
M110	325	325	325	325	325	325	325	325	325	325	325	262	262	263																			
M120	326	326	326	326	326	326	326	326	326	326	326	326	263	263																			

	Metric										NPT										PG								
NPT	M16	M20	M25	M32	M40	M50	M63	M75	M90	M100	1/2"	3/4"	1"	1 1/4"	1 1/2"	2"	2 1/2"	3"	3 1/2"	4"	5"	PG7&9	PG11	PG13.5	PG16	PG21	PG29	PG36	PG42	PG48
1/2"	314	232	234								245	246										314	232	232	232	265				
3/4"	315	315	234	235							315	246	247									315	315	315	234	235				
1"	316	316	316	236	237						316	316	248	249								316	316	316	316	236	237			
1 1/4"	317	317	317	317	237	238					317	317	317	249	250							317	317	317	317	317	237	238		
1 1/2"	318	318	318	318	318	238	240				318	318	318	318	250	251						318	318	318	318	318	318	238	239	240
2"	319	319	319	319	319	319	240	241			319	319	319	319	319	251	252					319	319	319	319	319	319	319	319	240
2 1/2"	320	320	320	320	320	320	320	242	243		320	320	320	320	320	320	253	254				320	320	320	320	320	320	320	320	320
3"	321	321	321	321	321	321	321	321	243	244	321	321	321	321	321	321	321	254	255			321	321	321	321	321	321	321	321	321
3 1/2"	322	322	322	322	322	322	322	322	322	244	322	322	322	322	322	322	322	322	255	256		322	322	322	322	322	322	322	322	322
4"	323	323	323	323	323	323	323	323	323	323	323	323	323	323	323	323	323	323	323	256	264	323	323	323	323	323	323	323	323	323
5"	–	–	–	–	–	–	–	–	–	–	327	327	327	327	327	327	327	327	327	327	–	–	–	–	–	–	–	–	–	–

	Metric								NPT							PG								
PG	M16	M20	M25	M32	M40	M50	M63	M75	1/2"	3/4"	1"	1 1/4"	1 1/2"	2"	2 1/2"	PG7&9	PG11	PG13.5	PG16	PG21	PG29	PG36	PG42	PG48
7&9	201	201							216							201	201	201						
11	202	202	203						217	218						301/202	202	202	202					
13.5	301	202	203						217	218						301	202	202	202	204				
16	302	203	203						218	218	221					302	302	203	203	204				
21	304	304	205	206	206				304	220	221					304	304	304	304	205	258			
29	306	306	306	306	208	209			306	306	223	223	224			306	306	306	306	306	208	209		
36	308	308	308	308	308	209	211		308	308	308	224	224			308	308	308	308	308	308	209	210	211
42	324	324	324	324	324	210	211		324	324	324	324	324	226		324	324	324	324	324	324	324	210	211
48	310	310	310	310	310	310	211	211	310	310	310	310	310	226	227	310	310	310	310	310	310	310	310	211

Adaptors and reducers selection guide

STEP 2 – Having obtained the reference number, go to the relevant column within the dimension tables to obtain the adaptor or reducer's dimensions. Please note that these dimensions refer to metallic products only.

Adaptors

Metric x metric, metric x PG, PG x metric, PG x PG																			
Reference numbers	201	202	203	204	205	206	207	208	209	210	211	212	213	214	215	216	257	258	259
Hex across flats	23.4	27.0	30.5	33.0	36.0	37.6	37.6	47.2	55.9	61.2	70.1	90.2	106.4	106.4	114.3	23.4	31.8	41.3	57.2
Hex across corners	26.8	31.0	35.0	38.0	41.5	43.2	43.2	53.4	64.3	70.4	81.8	103.7	122.4	122.4	131.4	26.8	36.1	47.7	66.0
Male thread length	16	16	16	16	16	16	16	16	16	16	16	16	16	20	20	15	16	16	16
Female thread length	17	17	17	17	17	17	17	17	17	17	17	17	22	22	22	20	17	17	17
Total length	38.5	38.5	38.5	38.5	38.5	38.5	38.5	38.5	39.5	39.5	39.5	39.5	45.0	49.0	49.0	42.0	38.5	38.5	39.5

Metric x NPT, PG x NPT																			
Reference numbers	217	218	219	220	221	222	223	224	225	226	227	228	229	230	231	261	262	263	-
Hex across flats	27.0	30.5	32.0	37.6	37.6	41.3	47.2	55.9	57.2	70.1	80.0	106.4	106.4	114.3	127.0	90.2	120.7	139.7	-
Hex across corners	31.0	35.0	36.7	43.2	43.2	47.5	53.4	64.3	66.0	81.8	92.0	122.4	122.4	131.4	147.0	104.1	139.4	161.3	-
Male thread length	16	16	16	16	16	16	16	16	16	16	16	16	16	16	16	16	20	20	-
Female thread length	20	20	20	20	25	25	26	26	26	27	40	35	42	42	44	22	22	22	-
Total length	42	42	42	42	47	47	47	48	48	48	58	58	62	62	62	48	48	49	-

NPT x metric, NPT x PG																			
Reference numbers	232	233	234	235	236	237	238	239	240	241	242	243	244	260	265	-	-	-	-
Hex across flats	23.4	28.6	30.5	37.6	37.6	44.5	55.9	70.1	70.1	90.2	90.2	106.4	114.3	90.2	33.0	-	-	-	-
Hex across corners	26.8	32.9	35.0	43.2	43.2	51.1	64.3	70.4	81.8	103.7	103.7	122.4	131.4	103.7	38.0	-	-	-	-
Male thread length	20	20	20	20	25	25	25	25	25	25	35	35	35	16	20				
Female thread length	17	17	17	17	17	17	17	17	17	17	17	22	22	35	77	-	-	-	-
Total length	43	43	43	43	48	48	49	49	49	49	59	64	64	58	43	-	-	-	-

NPT x NPT																			
Reference numbers	245	246	247	248	249	250	251	252	253	254	255	256	264	-	-	-	-	-	-
Hex across flats	23.4	30.5	37.6	37.6	47.2	55.9	70.1	80.0	80.0	106.4	114.3	127.0	158.8	-	-	-	-	-	-
Hex across corners	26.8	35.0	43.2	43.2	53.4	64.3	81.8	92.0	92.0	122.4	131.4	146.0	183.3	-	-	-	-	-	-
Male thread length	20	20	20	25	25	25	25	25	35	35	35	35	35	-	-	-	-	-	-
Female thread length	20	20	25	25	25	25	25	35	35	35	35	35	47	-	-	-	-	-	-
Total length	46	46	51	56	56	57	57	67	77	77	78	78	81	-	-	-	-	-	-

Reducers

Metric and PG																			
Reference numbers	301	302	303	304	305	306	307	308	309	310	311	312	313	324	325	326	-	-	-
Hex across flats	27.0	30.5	31.8	36.0	37.6	44.5	47.2	55.9	57.2	70.1	90.2	106.4	114.3	61.2	120.7	127.0	-	-	-
Hex across corners	31.0	35.0	36.7	41.5	43.2	51.1	53.4	64.3	66.0	81.8	103.7	122.4	131.0	70.7	139.4	146.6	-	-	-
Male thread length	16	16	16	16	16	16	16	16	16	16	16	20	20	16	16	16	-	-	-
Total length	26	26	26	26	26	26	26	27	27	27	27	31	31	27	28	28	-	-	-

NPT																			
Reference numbers	314	315	316	317	318	319	320	321	322	323	327	-	-	-	-	-	-	-	-
Hex across flats	23.4	27.9	34.9	44.5	52.1	61.2	80.0	90.2	106.4	120.7	146.0	-	-	-	-	-	-	-	-
Hex across corners	26.8	32.1	40.2	51.1	59.9	70.4	92.0	103.7	122.4	138.8	168.6	-	-	-	-	-	-	-	-
Male thread length	20	20	25	25	25	25	35	35	35	35	35	-	-	-	-	-	-	-	-
Total length	30	30	35	35	35	36	46	46	46	47	47	-	-	-	-	-	-	-	-

Metallic (Exd/Exe) adaptors and reducers - AD-U / RD-U Series

Type AD-U

Type RD-U

Redapt AD-U and RD-U series of explosion-proof metallic adaptors and reducers provide a method of matching electrical thread forms on hazardous area approved equipment whilst ensuring the integrity and Ex approval of the installation is maintained.

Manufactured from hexagon material to facilitate easy installation, they are also supplied complete with a captive O-ring seal. The O-ring is located within a recess on the face of the product, helping to protect the O-ring from the environmental damage and ensuring it is not displaced during installation. Designed for hazardous area applications and the range is certified to protection concepts Exd "Flameproof" and Exe "Increased Safety" for use in Zone 1 and Zone 2 applications. Also certified Ex tb "dust tight" for use in Zone 21 & 22 applications.

Materials

- Brass CZ121
- 316 stainless steel
- Aluminium
- Mild steel

Threadforms

- Metric
- NPT
- PG
- ISO Pipe (BSP)
- ET

Plating options

- Electroless nickel
- Zinc
- Chromated
- Others on application

Technical specifications

Code of protection categories
ATEX: I M2/II 2 GD
IECEx: Ex db I/IIC Mb/Gb, Ex eb I/IIC Mb/Gb, Ex tb IIIC Db (Aluminium not mining)
CSA: RD-U Ex db / Ex eb IIC Gb IP66/67/68; Cl I Zn 1 AEx eb / AEx db IIC Gb IP54; Cl I Div1 Gr ABCD Cl II Gr EFG Cl III; Type 3 AD-U Ex db / Ex eb IIC Gb IP66/67/68; Cl I Zn 1 AEx eb / AEx db IIC Gb IP54; Cl I Div1 Gr ABCD Cl II Gr EFG Cl III; Type 3
Compliance standards
ATEX: EN 60079-0, EN 60079-1, EN 60079-7, EN 60079-31
IECEx: IEC 60079-0, IEC 60079-1, IEC 60079-7, IEC 60079-31
CSA: CAN/CSA C22.2 No. 60079-0, No. 60079-1, No. 60079-7, ANSI/UL 60079-0, 60079-1, 60079-7, UL1203
Certificate details
ATEX: ITS16ATEX101339X
IECEx: IECEx ITS 16.0013X
EAC: RU C-GB.MIO62.B.06225
CSA: CSA01CA1248014X
INMETRO: NCC 18.0133 X
CCoE: P362565/1 (AD-U) ; P485509 (RD-U)
Temperature
Temperature will depend on the type of O-ring used:
None: -60°C to +200°C
Nitrile: -30°C to +80°C (supplied as standard)
EPDM: -50°C to +100°C
Neoprene: -40°C to +80°C
Viton: -20°C to +180°C
Silicone: -60°C to +180°C
Fluorosilicone: -60°C to +130°C
The maximum temperature is limited to +150°C for Group I applications
Ingress protection (IP):
IP64 when fitted without sealing washer. IP66/IP68 when fitted with O-ring or thread sealant according to manufacturer's instructions.
Part number:
Please refer to page 10 for part numbering system

Download certificates and documents here

Click here for full dimension table and drawings

Available thread sizes and corresponding bore size

Metric	Bore	NPT	Bore	ISO Pipe	Bore	ET	Bore	PG	Bore
M16	10.00	-	-	3/8"	10.00	5/8"	10.00	PG7	8.00
M20	14.00	½"	15.00	½"	15.00	¾"	14.00	PG9	10.00
M25	18.00	¾"	19.00	¾"	19.00	1"	18.00	PG11	13.50
M32	24.00	1"	25.00	1"	25.00	1¼"	24.00	PG13.5	14.00
M40	32.00	1¼"	32.00	1¼"	32.00	1½"	32.00	PG16	16.00
M50	41.00	1½"	38.00	1½"	38.00	2"	41.00	PG21	21.00
M63	53.00	2"	49.00	2"	49.00	2½"	53.00	PG29	29.00
M75	64.00	2½"	60.00	2½"	60.00	3"	64.00	PG36	38.00
M80 x 2.0	69.00	3"	75.00	3"	75.00	-	-	PG42	45.00
M85 x 2.0	73.00	3½"	88.00	3½"	88.00	-	-	PG48	50.00
M90 x 2.0	78.00	4"	100.00	4"	100.00	-	-	-	-

Sizes M12 to M120 available.

90 degree (Exd) adaptors - AR-U Series

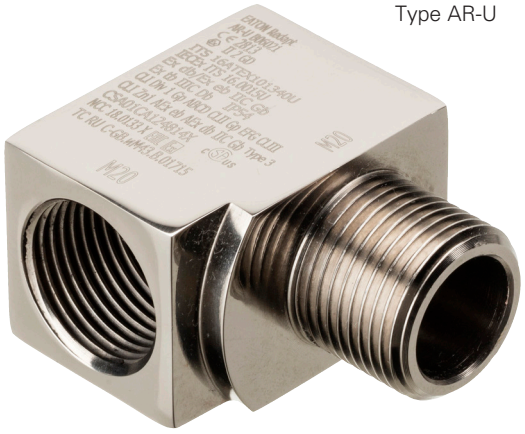

Type AR-U

Redapt AR-U series of explosion-proof 90 degrees shaped adaptors provide a method of matching electrical thread forms on hazardous area approved equipment whilst ensuring the integrity and Ex approval of the installation is maintained.

Available in various threadforms, AR-U series are the perfect solution to provide means of connection where space is limited.

Our AS-U series is available in any angle, for more information please contact us.

Technical specifications

Code of protection categories
ATEX: II 2 GD
IECEx: Ex db IIC Gb, Ex eb IIC Gb, Ex tb IIIC Db (Aluminium not mining)
CSA: Ex db / Ex eb IIC Gb IP54 Cl I Zn 1 AEx eb / AEx db IIC Gb IP54 Cl I Div1 Gr ABCD Cl II Gr EFG Cl III; Type 3
Compliance standards
ATEX: EN 60079-0, EN 60079-1, EN 60079-7, EN 60079-31
IECEx: IEC 60079-0, IEC 60079-1, IEC 60079-7, IEC 60079-31
CSA: CAN/CSA C22.2 No. 60079-0, No. 60079-1, No. 60079-7, ANSI/UL 60079-0, 60079-1, 60079-7, UL1203
Certificate details
ATEX: ITS16ATEX101340U
IECEx: IECEx ITS 16. 0015U
EAC: RU C-GB.ИМ43.B.01715
CSA: CSA01CA1248014X
INMETRO: NCC 18.0133 X
Temperature
-60°C to +200°C
Ingress protection (IP):
IP64 when fitted without sealing washer. IP66/IP68 when fitted with washer or thread sealant according to manufacturer's instructions
Part number:
Please refer to page 10 for part numbering system

Download certificates and documents here

Materials

- Brass CZ121
- Mild steel
- 316 stainless steel
- Aluminium

Plating options

- Electroless nickel
- Zinc
- Chromated
- Others on application

Threadforms

- Metric
- NPT
- NPSM
- PG
- ISO Pipe (BSP)
- ET

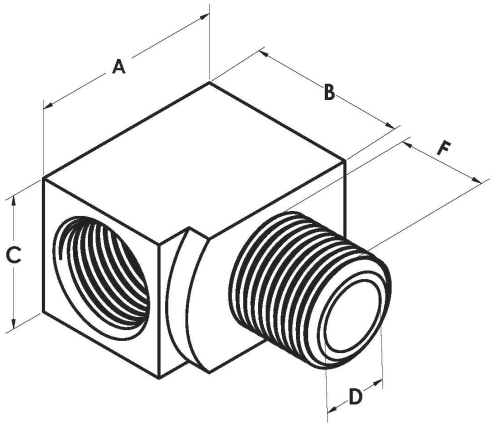

Dimensions

Size	Bore (D)	Male length (F)	Height (A)	Length (B)	Width (C)
M16 x M16	10.00	16.00	33.00	27.00	23.00
M20 x M20	14.00	16.00	39.00	29.00	25.40
M25 x M25	18.00	16.00	46.00	35.00	32.00
M32 x M32	24.00	16.00	51.00	44.00	40.00
M40 x M40	32.00	16.00	61.00	52.00	48.00
M50 x M50	41.00	16.00	73.00	65.00	60.00
M63 x M63	53.00	16.00	86.00	77.00	73.00
M75 x M75	64.00	16.00	99.00	94.00	87.00

'T' (Exd/Exe) adaptors - AT-U Series

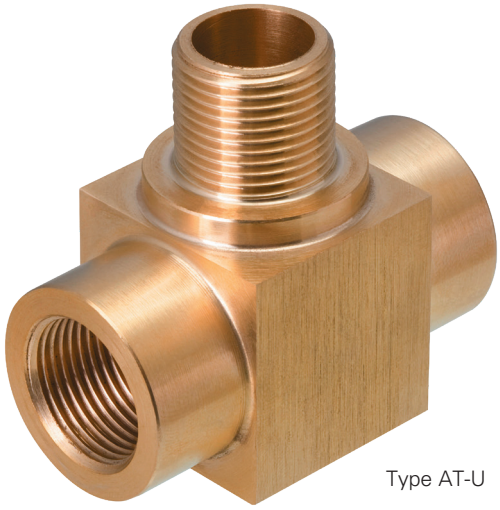

Type AT-U

Technical specifications

Code of protection categories
ATEX: I M2, II 2 GD
IECEx: Ex db I/IIC Mb/Gb, Ex eb I/IIC Mb/Gb, Ex tb IIIC Db (Aluminium not mining)
Compliance standards
ATEX: EN 60079-0, EN 60079-1, EN 60079-7, EN 60079-31
IECEx: IEC 60079-0, IEC 60079-1, IEC 60079-7, IEC 60079-31
Certificate details
ATEX: ITS16ATEX101340U
IECEx: IECEx ITS 16.0015U
EAC: RU C-GB.ИМ43.B.01715
INMETRO: NCC 18.0133 X
Temperature
-60°C to +200°C
Ingress protection (IP):
IP64 when fitted without sealing washer. IP66/IP68 when fitted with washer or thread sealant according to manufacturer's instructions
Part number:
Please refer to page 10 for part numbering system

Download certificates and documents here

Redapt AT-U series of explosion-proof shaped adaptors provide an opportunity for installers to run cables in additional entries where pre-machine entries are limited or at an angle in confined or difficult situations.

Compared to traditional methods of creating additional entries in enclosures Redapt shaped adaptors can reduce downtime from three weeks to one hour and total cost by half.
Available in brass, aluminium, mild steel and stainless steel 316L, the AT-U series provides an opportunity for two cable entries using one equipment entry and maintains Ex certification while matching various threadforms.

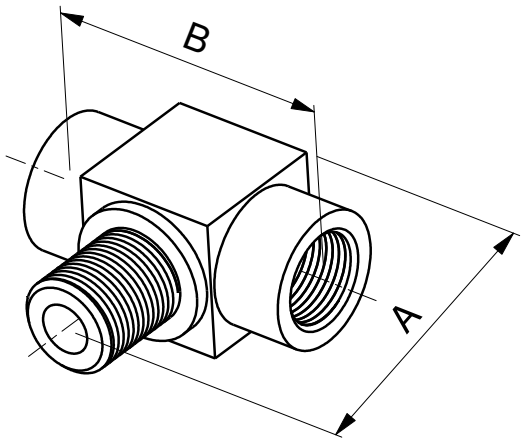

Materials

- Brass CZ121
- 316 stainless steel
- Mild steel
- Aluminium

Threadforms

- Metric
- NPT

Plating options

- Electroless nickel
- Zinc
- Chromated
- Others on application

Dimensions

Male size	Female size	A (max.)	B (max.)
M16	M16 to M20	49.00	60.00
M20	M16 to M25	55.00	65.00
M25	M16 to M32	64.00	72.00
M32	M16 to M40	73.00	80.00
M40	M16 to M50	84.00	90.00
M50	M16 to M63	99.50	105.00
M63	M16 to M75	117.00	120.00
M75	M16 to M75	117.00	120.00
3/8" NPT	3/8" to ½" NPT	49.50	60.00
½" NPT	3/8" to ¾" NPT	60.20	65.00
¾" NPT	3/8" to 1" NPT	69.50	72.00
1" NPT	3/8" to 1¼" NPT	84.30	81.00
1¼" NPT	3/8" to 1½" NPT	95.00	90.00
1½" NPT	3/8" to 2" NPT	111.00	105.00
2" NPT	3/8" to 2½" NPT	129.20	120.00
2½" NPT	3/8" to 2½" NPT	142.50	120.00

'Y' (Exd/Exe) adaptors - AY-U Series

Type AY-U

Technical specifications

Code of protection categories
ATEX: I M2, II 2 GD
IECEx: Ex db I/IIC Mb/Gb, Ex eb I/IIC Mb/Gb, Ex tb IIIC Db
Compliance standards
ATEX: EN 60079-0, EN 60079-1, EN 60079-7, EN 60079-31
IECEx: IEC 60079-0, IEC 60079-1, IEC 60079-7, IEC 60079-31
Certificate details
ATEX: ITS16ATEX101340U
IECEx: IECEx ITS 16.0015U
EAC: RU C-GB.ИМ43.B.01715
INMETRO: NCC 18.0133 X
Temperature
-60°C to +200°C
Ingress protection (IP):
IP64 when fitted without sealing washer. IP66/IP68 when fitted with washer or thread sealant according to manufacturer's instructions
Part number:
Please refer to page 10 for part numbering system

Redapt AY-U series of explosion-proof shaped adaptors provide an opportunity for installers to run cables in additional entries where pre-machine entries are limited or at an angle in confined or difficult situations.

Compared to traditional methods of creating additional entries in enclosures Redapt shaped adaptors can reduce downtime from three weeks to one hour and total cost by half.
Available in brass, aluminium, mild steel and stainless steel 316L, the AY-U series provides extra means of connection where space is limited and maintains Ex certification while matching various threadforms.

Download certificates and documents here

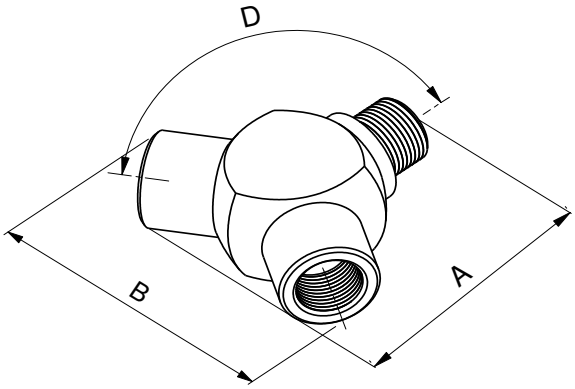

Materials

- Brass CZ121
- 316 stainless steel
- Mild steel
- Aluminium

Threadforms

- Metric
- NPT

Plating options

- Electroless nickel
- Zinc
- Chromated
- Others on application

Dimensions

Male size	Female size	A (max.)	B (max.)	Angle between entries (D)
M16	M16	65.00	75.00	120°
M20	M20	65.00	75.00	120°
M25	M25	67.00	78.00	120°
M32	M32	70.00	81.00	120°
M40	M40	89.00	102.00	120°
M50	M50	104.00	120.00	120°
M63	M63	131.00	151.00	120°
M75	M75	153.00	177.00	120°
⅜" NPT	⅜" NPT	65.00	75.00	120°
½" NPT	½" NPT	65.00	75.00	120°
¾" NPT	¾" NPT	67.00	78.00	120°
1" NPT	1" NPT	78.00	90.00	120°
1¼" NPT	1¼" NPT	89.00	102.00	120°
1½" NPT	1½" NPT	104.00	120.00	120°
2" NPT	2" NPT	131.00	151.00	120°
2½" NPT	2½" NPT	153.00	177.00	120°

In-line (Exd/Exe) swivel adaptors - TA-U, TC-U & TD-U Series

Type TA-U

Technical specifications

Code of protection categories
ATEX: I M2, II 2 GD
IECEx: Ex db I/IIC Mb/Gb, Ex eb I/IIC Mb/Gb, Ex tb IIIC Db (Aluminium not mining)
Compliance standards
ATEX: EN 60079-0, EN 60079-1, EN 60079-7, EN 60079-31
IECEx: IEC 60079-0, IEC 60079-1, IEC 60079-7, IEC 60079-31
Certificate details
ATEX: ITS16ATEX101340U
IECEx: IECEx ITS 16.0015U
EAC: RU C-GB.ИМ43.B.01715
INMETRO: NCC 18.0133 X
Temperature
-50°C to +150°C
Ingress protection (IP):
IP64 when fitted without sealing washer. IP66/IP68 when fitted with washer or thread sealant according to manufacturer's instructions
Part number:
Please refer to page 10 for part numbering system

Download certificates and documents here

Redapt TA-U, TC-U & TD-U series of in-Line explosion-proof swivel adaptors provide a method of matching various electrical thread forms on hazardous area approved equipment.
Available in brass, aluminium and stainless steel 316L, the TA-U series ensure the integrity and the Ex approval of the installation.

These in-line models allow independent connection at both ends and improve ease of installation in confined or difficult situations.

Materials

- Brass CZ121
- Mild steel
- 316 stainless steel
- Aluminium

Plating options

- Electroless nickel
- Zinc
- Chromated
- Others on application

Threadforms

- Metric
- NPT
- NPSM
- PG
- ISO Pipe (BSP)
- ET

NPT to NPT

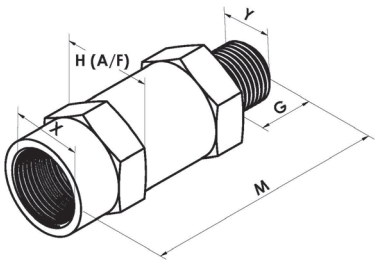

Dimensions

Thread (Y)	Thread (X)	H A/F	G (mm)	M (mm)
1/2" NPT	1/2" NPT	1.1"	20.2	83.8
3/4" NPT	3/4" NPT	1.4"	20.5	84.1
1" NPT	1" NPT	1.7"	25.3	94.4
1 1/4" NPT	1 1/4" NPT	2.0"	26.0	96.6
1 1/2" NPT	1 1/2" NPT	2.5"	26.5	97.8
2" NPT	2" NPT	3.0"	27.2	100.0
2 1/2" NPT	2 1/2" NPT	3.3"	40.5	126.3

Metric to metric

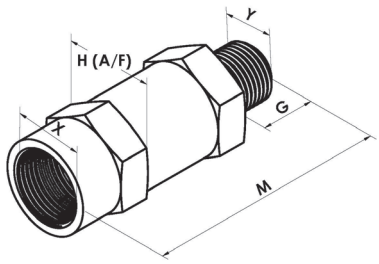

Dimensions

Thread (Y)	Thread (X)	H A/F	M (mm)
M20 x 1.5	M20 x 1.5	1.1"	80.6
M25 x 1.5	M25 x 1.5	1.4"	80.6
M32 x 1.5	M32 x 1.5	1.7"	81.1
M40 x 1.5	M40 x 1.5	2.0"	82.1
M50 x 1.5	M50 x 1.5	2.5"	82.3
M63 x 1.5	M63 x 1.5	3.0"	82.8
M75 x 1.5	M75 x 1.5	3.3"	84.8

90 degree (Exd/Exe) swivel adaptors - TP-U, TQ-U & TR-U Series

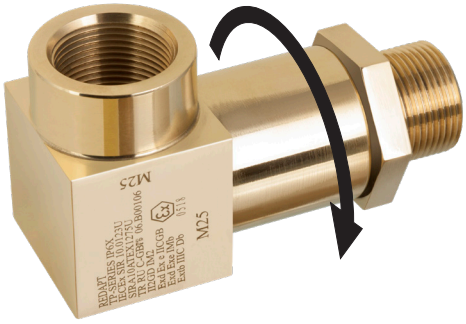

Type TP-U

Technical specifications

Code of protection categories
ATEX: I M2, II 2 GD
IECEx: Ex db I/IIC Mb/Gb, Ex eb I/IIC Mb/Gb, Ex tb IIIC Db (Aluminium not mining)
Compliance standards
ATEX: EN 60079-0, EN 60079-1, EN 60079-7, EN 60079-31
IECEx: IEC 60079-0, IEC 60079-1, IEC 60079-7, IEC 60079-31
Certificate details
ATEX: ITS16ATEX101340U
IECEx: IECEx ITS 16.0015U
EAC: RU C-GB.ИМ43.B.01715
INMETRO: NCC 18.0133 X
Temperature
-50°C to +150°C
Ingress protection (IP):
IP64 when fitted without sealing washer. IP66/IP68 when fitted with washer or thread sealant according to manufacturer's instructions
Part number:
Please refer to page 10 for part numbering system

Download certificates and documents here

Redapt TP-U, TQ-U & TR-U series of 90 degree explosion-proof swivel adaptors provide a method of matching various electrical thread forms on hazardous area approved equipment.
Available in brass, aluminium and stainless steel 316L, the TP-U series ensure the integrity and the Ex approval of the installation.

These 90 degree models allow a 360° choice of cable entry and exit positions, and improve ease of installation in confined or difficult situations.

90° swivel adaptor

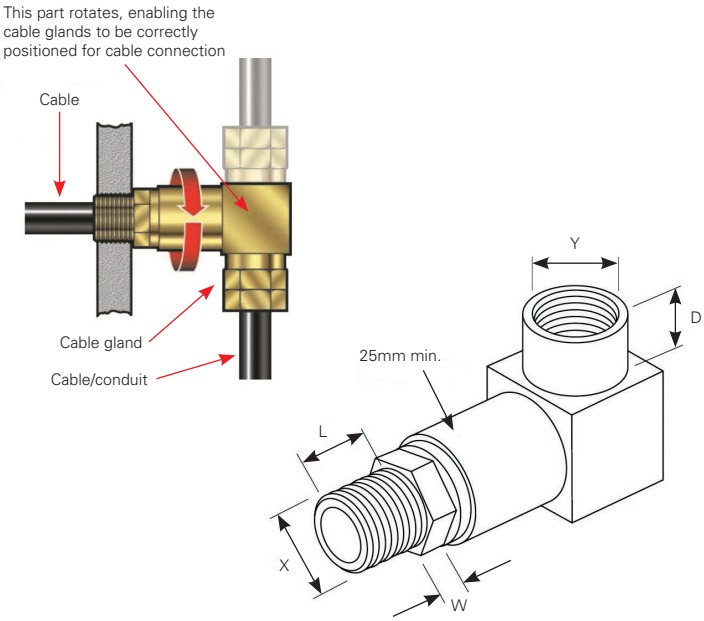

Materials

- Brass CZ121
- Mild steel
- 316 stainless steel
- Aluminium

Plating options

- Electroless nickel
- Zinc
- Chromated
- Others on application

Threadforms

- Metric
- NPT
- NPSM
- PG
- ISO Pipe (BSP)
- ET

Dimensions

M20	M20	17.00	4.00	17.00
M25	M20 to M25	17.00	4.00	17.00
M32	M20 to M32	17.00	5.00	17.00
M40	M20 to M40	17.00	5.00	17.00
M50	M20 to M50	17.00	5.00	17.00
M63	M20 to M63	17.00	5.00	17.00
M75	M20 to M75	17.00	5.00	17.00

Male to male (Exd/Exe) adaptors - AM-U Series

Type AM-U

Redapt AM-U series of explosion-proof metallic adaptors provide a method of matching electrical thread forms on hazardous area approved equipment whilst ensuring the integrity and Ex approval of the installation is maintained.

Available in various threadforms, AM-U series are the best solution to provide method of connecting female threadforms.

Technical specifications

Code of protection categories
ATEX: I M2, II 2 GD
IECEx: Ex db I/IIC Mb/Gb, Ex eb I/IIC Mb/Gb, Ex tb IIIC Db
CSA: Ex db / Ex eb IIC Gb IP54 Cl I Zn 1 AEx eb / AEx db IIC Gb IP54 Cl I Div 1 Gr CD, Cl I Div 2 Gr ABCD Cl II Gr EFG; Cl III; Type 3
Compliance standards
ATEX: EN 60079-0, EN 60079-1, EN 60079-7, EN 60079-31
IECEx: IEC 60079-0, IEC 60079-1, IEC 60079-7, IEC 60079-31
CSA: CAN/CSA C22.2 No. 60079-0, No. 60079-1, No. 60079-7, ANSI/UL 60079-0, 60079-1, 60079-7, UL1203
Certificate details
ATEX: ITS16ATEX101339X
IECEx: IECEx ITS 16.0013X
CSA: CSA01CA1248014X
EAC: RU C-GB.MIO62.B.06225
INMETRO: NCC 18.0133 X
Temperature
-60°C to +200°C
Ingress protection (IP):
IP64 when fitted without sealing washer. IP66/IP68 when fitted with washer or thread sealant according to manufacturer's instructions
Part number:
Please refer to page 10 for part numbering system

Download certificates and documents here

Materials

- Brass CZ121
- 316 stainless steel
- Mild steel
- Aluminium

Threadforms

- Metric
- NPT
- PG
- ISO pipe (BSP)
- ET

Plating options

- Electroless nickel
- Zinc
- Chromated
- Others on application

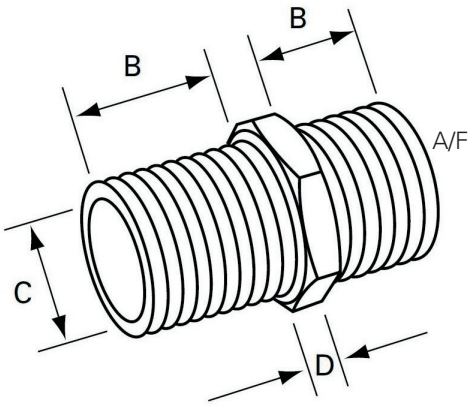

Dimensions

Size	B (min.)	C	D	A/F
M16	16.00	11.00	5.00	23.37
M20	16.00	14.00	5.50	23.37
M25	16.00	18.00	5.50	30.48
M32	16.00	24.00	5.50	37.59
M40	16.00	32.00	5.50	47.24
M50	16.00	41.00	6.00	55.88
M63	16.00	53.00	6.00	70.10
M75	16.00	64.00	6.50	80.01

Female to female (Exd/Exe) adaptors - AF-U Series

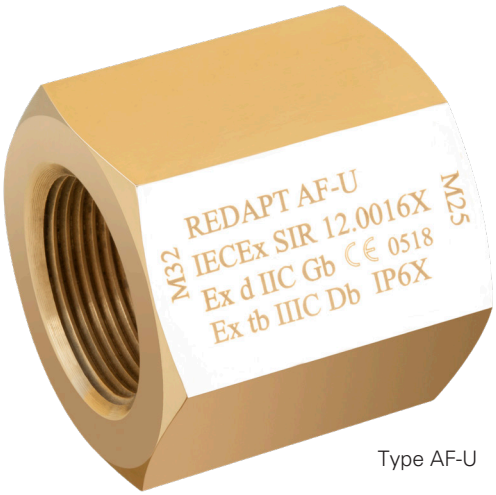

Type AF-U

Technical specifications

Code of protection categories
ATEX: I M2, II 2 GD
IECEx: Ex db I/IIC Mb/Gb, Ex eb I/IIC Mb/Gb, Ex tb IIIC Db
Compliance standards
ATEX: EN 60079-0, EN 60079-1, EN 60079-7, EN 60079-31
IECEx: IEC 60079-0, IEC 60079-1, IEC 60079-7, IEC 60079-31
Certificate details
ATEX: ITS16ATEX101339X
IECEx: IECEx ITS 16.0013X
EAC: RU C-GB.МЮ62.B.06225
INMETRO: NCC 18.0133 X
Temperature
-60°C to +200°C
Ingress protection (IP):
IP64 when fitted without sealing washer. IP66/IP68 when fitted with washer or thread sealant according to manufacturer's instructions
Part number:
Please refer to page 10 for part numbering system

Redapt AF-U series of explosion-proof metallic adaptors provide a method of matching electrical thread forms on hazardous area approved equipment whilst ensuring the integrity and Ex approval of the installation is maintained.

Available in various threadforms, AF-U series are the best solution to provide method of connecting male threadforms.

Download certificates and documents here

Materials

- Brass CZ121
- 316 stainless steel
- Mild steel
- Aluminium

Plating options

- Electroless nickel
- Zinc
- Chromated
- Others on application

Threadforms

- Metric
- NPT
- PG
- ISO pipe (BSP)
- ET

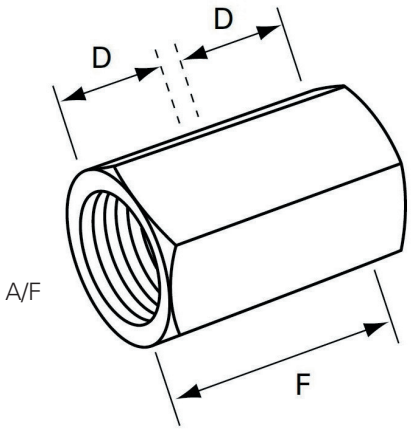

Dimensions

Size	D	F	A/F
M16	16.00	37.50	23.37
M20	16.00	37.50	23.37
M25	16.00	37.50	30.48
M32	16.00	37.50	37.59
M40	16.00	37.50	47.24
M50	16.00	37.50	55.88
M63	16.00	37.50	70.10
M75	16.00	37.50	80.01

Insulated (Exd/Exe) adaptors - DB Series

Type DB

Technical specifications

Code of protection categories
ATEX: II 2 GD, Ex db IIC Gb, Ex eb IIC Gb, Ex tb IIIC Db
IECEx: Ex db IIC Gb, Ex eb IIC Gb, Ex tb IIIC Db
Compliance standards
ATEX: EN 60079-0, EN 60079-1, EN 60079-7, EN 60079-31
IECEx: IEC 60079-0, IEC 60079-1, IEC 60079-7, IEC 60079-31
Certificate details
ATEX: ITS16ATEX101088X
IECEx: IECEx ITS 16.0049X
Temperature
-20°C to +130°C
Ingress protection (IP):
IP64 when fitted without sealing washer. IP66/IP68 when fitted with washer or thread sealant according to manufacturer's instructions
Part number:
Please refer to page 10 for part numbering system

Download certificates and documents here

The DB series is a Redapt range of insulated adaptors that provide a method of insulating a cable gland and the cable armour from the equipment into which it has been fixed.

Insulated adaptors provide a vital safety precaution for systems with sensitive electronic equipment that are reliant on an interference-free power supply.
Male and female thread are available in different materials if galvanic corrosion is a factor.
With ATEX and IECEx certification for both Exd "Flameproof" and Exe "Increased Safety" environments, insulated adaptors are suited for hazardous-area applications worldwide.

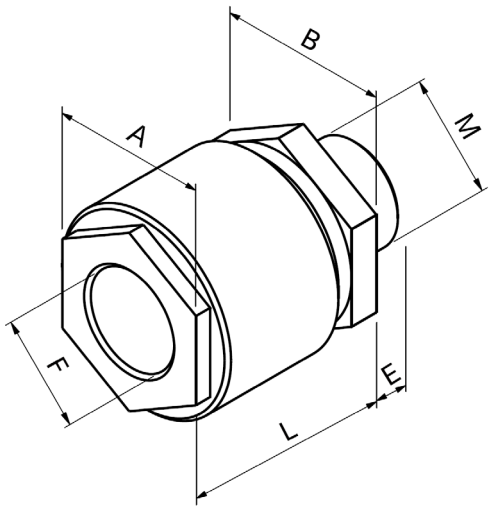

Materials
- Brass CZ121
- 316 stainless steel
- Mild steel
- Aluminium

Plating options
- Electroless nickel
- Zinc
- Others on application

Threadforms
- Metric
- NPT
- NPSM
- PG
- ISO pipe (BSP)
- ET

Dimensions

Size	Total length (A)	Male length (B)
M16	64.00 (min.)	15.00 (min.)
M20	64.00 (min.)	15.00 (min.)
M25	64.00 (min.)	15.00 (min.)
M32	64.00 (min.)	15.00 (min.)
M40	64.00 (min.)	15.00 (min.)
M50	64.00 (min.)	15.00 (min.)
M63	64.00 (min.)	15.00 (min.)
M75	64.00 (min.)	15.00 (min.)

Application

To avoid relying on the contact between cable termination and equipment enclosure for grounding the cable armour, an insulated adaptor can be fitted to both ends of the cable with a grounding device (i.e. earth tag/lug) fitted between the adaptor and the termination. The armour current can then be taken from the grounding device to ground in a controlled, positive manner that can be ***inspected*** easily.

Single point grounding

In many applications it is sufficient to ground the cable armour at one end. For single point grounding, the insulated adaptors would again be used at both ends of the cable but with the earth tag fitted only to the end where grounding is required.

Single point grounding can:

- Reduce the circulating currents that can cause heating of high capacity cables.
- Reduce the risk of damage to electronic equipment within the enclosure in the event of a short circuit to ground through the enclosure.
- Reduce the problems of electrical noise on the armour affecting the clean earth required for some sensitive instruments.

Standard application

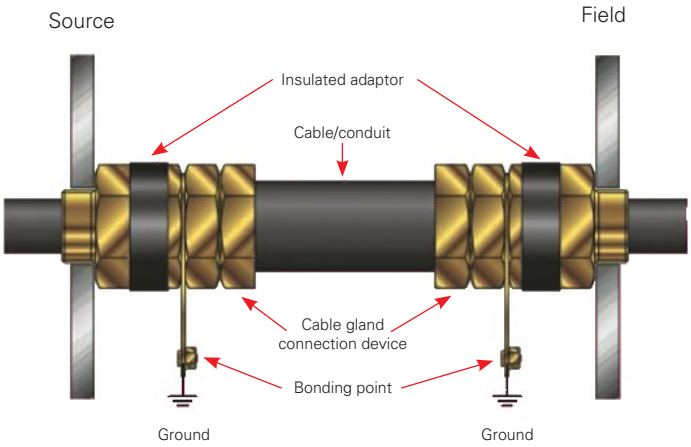

Single point grounding

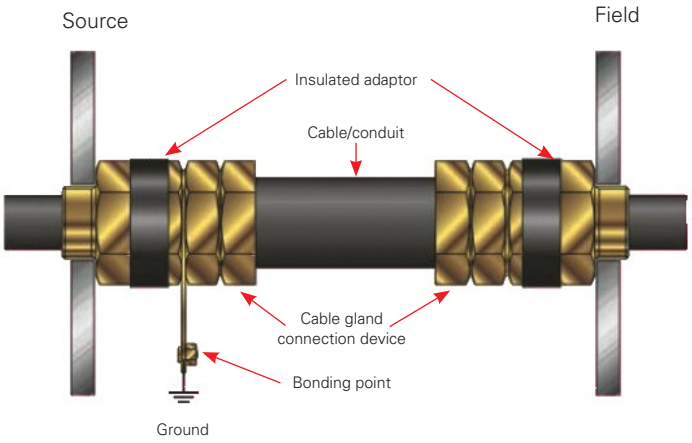

Note: Graphic representation only - actual appearance may differ.

Metallic dome head (Exd/Exe) stopping plugs - PD-U Series

Type PD-U

Redapt PD-U series of stopping plugs provide a method of blanking off unused entries in hazardous area approved equipment whilst ensuring the integrity and Ex approval of the installation is maintained.

Manufactured to facilitate easy installation, they are also supplied complete with a captive O-ring seal. The O-ring is located within a recess on the face of the product, helping to protect the O-ring from the environmental damage and ensuring it is not displaced during installation.

Materials

- Brass CZ121
- 316 stainless steel
- Aluminium
- Mild Steel

Plating options

- Electroless nickel
- Zinc
- Chromated
- Others on application

Threadforms

- Metric
- NPT
- NPSM
- PG
- ISO pipe (BSP)
- ET

Technical specifications

Code of protection categories
ATEX: I M2/II 2 GD
IECEx: Ex db I/IIC Mb/Gb, Ex eb I/IIC Mb/Gb, Ex tb IIIC Db (Aluminium not mining)
CSA: Ex db / Ex eb IIC Gb IP66/67/68 Cl I Zn 1 AEx eb / AEx db IIC Gb Cl I Div1 Gr ABCD Cl II Gr EFG Cl III; Type 4X/6P
Compliance standards
ATEX: EN 60079-0, EN 60079-1, EN 60079-7, EN 60079-31
IECEx: IEC 60079-0, IEC 60079-1, IEC 60079-7, IEC 60079-31
CSA: CAN/CSA C22.2 No. 60079-0, No. 60079-1, No. 60079-7, ANSI/UL 60079-0, 60079-1, 60079-7, UL1203
Certificate details
ATEX: ITS16ATEX101335X
IECEx: IECEx ITS 16.0012X
EAC: RU C-GB.MIO62.B.06226
CSA: CSA01CA1248014X
INMETRO: NCC 18.0133 X
CCoE: P362565/1
Temperature
Temperature will depend on the type of O-ring used:
None: -60°C to +200°C
Nitrile: -30°C to +80°C (supplied as standard)
EPDM: -50°C to +100°C
Neoprene: -40°C to +80°C
Viton: -20°C to +180°C
Silicone: -60°C to +180°C
Fluorosilicone: -60°C to +130°C
The maximum temperature is limited to +150°C for Group I applications
Ingress protection (IP):
IP66, IP68, CSA Enclosure Type (NEMA 4X, 6P)
Part number:
Please refer to page 10 for part numbering system

Download certificates and documents here

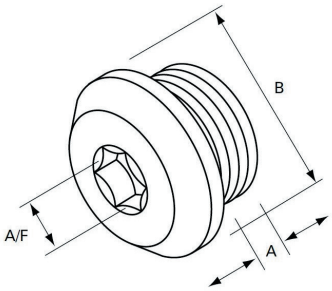

Dimensions

Size	Thread length (A)	Hex (Allen) key A/F	Diameter (B)
M16	15.00	10.00	22.00
M20	15.00	10.00	27.00
M25	15.00	10.00	31.75
M32	15.00	10.00	40.00
M40	15.00	10.00	47.63
M50	15.00	10.00	57.15
M63	15.00	14.00	69.85
M75	15.00	14.00	82.55

Type A and Type B (Exde) stopping plugs - PA-U / PB-U Series

Type PA-U

Type PB-U

Redapt PA-U & PB-U series of stopping plugs provide a method of blanking off unused entries in hazardous area approved equipment whilst ensuring the integrity and Ex approval of the installation is maintained. Shouldered plugs are not permitted in Exd application using NPT threads.
Therefore the PA-U and PB-U are the perfect choice in this application.

Technical specifications

Code of protection categories
ATEX: I M2/II 2 GD
IECEx: Ex db I/IIC Mb/Gb, Ex eb I/IIC Mb/Gb, Ex tb IIIC Db
CSA: Ex db / Ex eb IIC Gb IP54 Cl I Zn 1 AEx eb / AEx db IIC Gb IP54 Cl I Div1 Gr ABCD Cl II Gr EFG Cl III; Type 3
Compliance standards
ATEX: EN 60079-0, EN 60079-1, EN 60079-7, EN 60079-31
IECEx: IEC 60079-0, IEC 60079-1, IEC 60079-7, IEC 60079-31
CSA: CAN/CSA C22.2 No. 60079-0, No. 60079-1, No. 60079-7, ANSI/UL 60079-0, 60079-1, 60079-7, UL1203
Certificate details
ATEX: ITS16ATEX101335X
IECEx: IECEx ITS 16.0012X
EAC: RU C-GB.MIO62.B.06226
CSA: CSA01CA1248014X
INMETRO: NCC 18.0133 X
Temperature
-60°C to +200°C
Ingress protection (IP):
IP64 when fitted without sealing washer. IP66/IP68 when fitted with washer or thread sealant according to manufacturer's instructions.
Part number:
Please refer to page 10 for part numbering system

Download certificates and documents here

Materials

- Brass CZ121
- 316 stainless steel
- Aluminium
- Mild steel

Plating options

- Electroless nickel
- Zinc
- Chromated
- Others on application

Threadforms

- Metric
- NPT
- NPSM
- PG
- ISO pipe (BSP)
- ET

Dimensions

D Thread	A O/L	C A/F
M12	17.00	6.00
M14	17.00	6.00
M16	17.00	8.00
M20	17.00	10.00
M25	17.00	10.00
M32	17.00	10.00
M40	17.00	10.00
M50	17.00	10.00
M63	17.00	14.00
M75	17.00	14.00
M80	22.00	14.00
M85	22.00	14.00
M90	22.00	14.00
M100	22.00	14.00
M110	22.00	14.00
M120	22.00	14.00

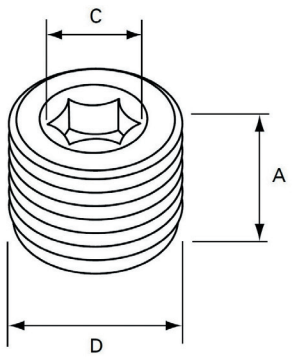

Type PA-U

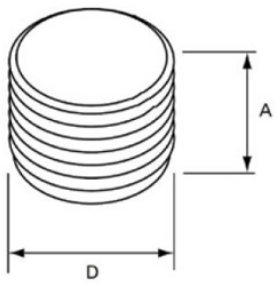

Type PB-U

Glass filled nylon dome head (Exe) stopping plugs – PD-E4 Series

Type PD-E4

Redapt PD-E4 series of stopping plugs provide a method of blanking off unused entries in hazardous area approved equipment whilst ensuring the integrity and Ex approval of the installation is maintained.

Manufactured to facilitate easy installation, they are also supplied as standard with a nitrile O-ring seal. The O-ring is located within a recess on the face of the product, helping to protect it from the environmental damage and ensuring it is not displaced during installation.

Technical specifications

Code of protection categories
ATEX: II 2 GD
IECEx: Ex eb IIC Gb, Ex tb IIIC Db
CSA: Class I, Zone 1; AEx eb IIC Gb IP66/67/68 Class I, Division 2, Groups A, B, C & D; Class II, Groups E, F & G, Class III; Enclosure Type 4X/6P
Compliance standards
ATEX: EN 60079-0, EN 60079-1, EN 60079-7, EN 60079-31
IECEx: IEC 60079-0, IEC 60079-1, IEC 60079-7, IEC 60079-31
CSA: CAN/CSA C22.2 No. 60079-0, No. 60079-7, ANSI/UL 60079-0, 60079-1, 60079-7
Certificate details
ATEX: ITS16ATEX101335X
IECEx: IECEx ITS 16.0012X
EAC: RU C-GB.MIO62.B.06226
CSA: CSA01CA1248014X
INMETRO: NCC 18.0133 X
Temperature
Temperature will depend on the type of O-ring used:
None: -30°C to +90°C
Nitrile: -30°C to +80°C
Ingress protection (IP):
Independently tested to IP66 / IP68 when fitted in accordance to manufacturer's instructions.
Part number:
Please refer to page 10 for part numbering system

Download certificates and documents here

Materials

- Glass filled nylon

Threadforms

- Metric
- NPT
- NPSM
- PG
- ISO pipe (BSP)
- ET

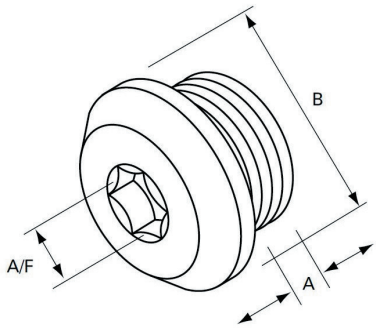

Dimensions

Size	Thread length (A)	Hex (Allen) key A/F	Diameter (B)
M16	10.00 (min)	10.00	20.50 (min)
M20	10.00 (min)	10.00	24.50 (min)
M25	10.00 (min)	10.00	29.50 (min)
M32	10.00 (min)	10.00	36.50 (min)
M40	10.00 (min)	10.00	44.50 (min)
M50	10.00 (min)	10.00	54.50 (min)
M63	10.00 (min)	14.00	67.50 (min)
M75	10.00 (min)	14.00	79.50 (min)

Increased safety (Exe) breather drains (metallic) - DP-E Series

Type DP-E

Redapt DP-E series of Exe breather drains provide a method of preventing moisture build-up within a hazardous area approved enclosure whilst ensuring the integrity and Ex approval of the installation is maintained.

They allow for air within an enclosure to breathe with the surrounding atmosphere helping to prevent condensation and any potential damage to sensitive electric/electronic equipment housed within. All whilst maintaining an IP66 rating of the enclosure it is installed in.
Designed for hazardous area applications, Redapt's DP-E series of breather drains are certified to protection concept Exe "Increased Safety" for use in Zone 1 and Zone 2 applications. Also certified Ex tb "dust tight" for use in Zone 21 & 22 applications.

Technical specifications

Code of protection categories
ATEX: I M2/II 2 GD, Ex e I/II Mb Gb, Ex tb IIIC Db
IECEx: Ex e I/IIC Mb/Gb, Ex tb IIIC Db
CSA: Ex eb IIC Gb IP66 Cl I Zn 1 AEx eb IIC Gb Enclosure Type 4X (NEMA 4X)
Compliance standards
ATEX: EN 60079-0, EN 60079-7, EN 60079-31
IECEx: IEC 60079-0, IEC 60079-7, IEC 60079-31
CSA: C22.2 No. 0-10, CAN/CSA C22.2 NO. 18.3-12, CAN/CSA C22.2 No. 60079-0, CAN/CSA C22.2 No. 60079-7, CAN/CSA C22.2 NO. 94-M91 ANSI/UL 514B, ANSI/UL 60079-0 ANSI/UL 60079-7, ANSI/UL 50
Certificate details
ATEX: ITS16ATEX101338X
IECEx: IECEx ITS 16.0014X
EAC: RU C-GB.MIO62.B.06227
CSA: CSA00CA1033919X
INMETRO: NCC 18.0165 X
Temperature
Dependent on filter and O-ring seal
Metallic body: -60°C to +200°C, without an O-ring seal
Filter options:
HDPE filter: -50°C to 85°C
Metal filter: dependent on interface material
Interface O-ring Material options:
Nitrile: -30°C to +80°C (supplied as standard with HDPE filter version)
EPDM: -50°C to +100°C
Neoprene: -40°C to +80°C
Viton: -20°C to +180°C
Silicone: -60°C to +180°C
Fluorosilicone: -60°C to +130°C
Ingress protection (IP):
IP66 when fitted in accordance to manufacturer's instructions.
Part number:
Please refer to page 10 for part numbering system

Materials

- Brass CZ121
- 316 stainless steel
- Aluminium

Threadforms

- Metric
- NPT

Plating options

- Electroless nickel
- Zinc
- Others on application

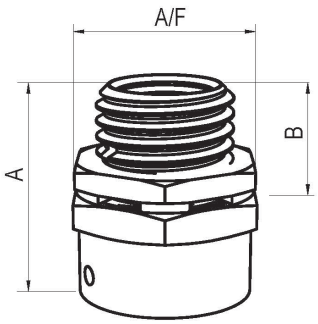

Download certificates and documents here

Dimensions

Size	A/F	Overall length (A)	Thread length (B)
M20	28.60	23.00 (min.)	10.00 (min.)
M25	34.90	23.00 (min.)	10.00 (min.)
M32	41.30	23.00 (min.)	10.00 (min.)
½" NPT	28.60	28.00 (min.)	15.00 (min.)
¾" NPT	34.90	28.00 (min.)	15.00 (min.)
1" NPT	41.30	28.00 (min.)	15.00 (min.)

For M16 dimensions please contact our customer service team.

Increased safety (Exe) breather drains (nylon) - DP-E4 Series

Type DP-E4

Redapt DP-E4 series of Exe breather drains provide a method of preventing moisture build-up within a hazardous area approved enclosure whilst ensuring the integrity and Ex approval of the installation is maintained.

They allow for air within an enclosure to breathe with the surrounding atmosphere helping to prevent condensation and any potential damage to sensitive electric/electronic equipment housed within.
All whilst maintaining an IP66 rating of the enclosure it is installed in. Designed for hazardous area applications, Redapt's DP-E4 series of breather drains are certified to protection concept Exe "Increased Safety" for use in Zone 1 and Zone 2 applications. Also certified Ex tb "dust tight" for use in Zone 21 & 22 applications.

Technical specifications

Code of protection categories
ATEX: II 2 GD, Ex eb II Mb Gb, Ex tb IIIC Db
IECEx: Ex eb IIC Mb/Gb, Ex tb IIIC Db
CSA: Ex eb IIC Gb IP66 Cl I Zn 1 AEx eb IIC Gb Enclosure Type 4X (NEMA 4X)
Compliance standards
ATEX: EN 60079-0, EN 60079-7, EN 60079-31
IECEx: IEC 60079-0, IEC 60079-7, IEC 60079-31
CSA: C22.2 No. 0-10, CAN/CSA C22.2 NO. 18.3-12, CAN/CSA C22.2 No. 60079-0, CAN/CSA C22.2 No. 60079-7, CAN/CSA C22.2 NO. 94-M91 ANSI/UL 514B, ANSI/UL 60079-0 ANSI/UL 60079-7, ANSI/UL 50
Certificate details
ATEX: ITS16ATEX101338X
IECEx: IECEx ITS 16.0014X
EAC: RU C-GB.MIO62.B.06227
CSA: CSA00CA1033919X
INMETRO: NCC 18.0165 X
Temperature
Dependent on filter and O-ring seal
Nylon body: -30°C to +90°C, unless limited by filter material
Filter options:
HDPE filter: -50°C to 85°C
Metal filter: dependent on body and interface material
Interface O-ring material options:
Nitrile: -30°C to +80°C (supplied as standard)
EPDM: -50°C to +100°C
Neoprene: -40°C to +80°C
Viton: -20°C to +180°C
Silicone: -60°C to +180°C
Fluorosilicone: -60°C to +130°C
Ingress protection (IP):
IP66 when fitted in accordance to manufacturer's instructions.
Part number:
Please refer to page 10 for part numbering system

Materials

- Glass filled nylon

Threadforms

- Metric
- NPT

Download certificates and documents here

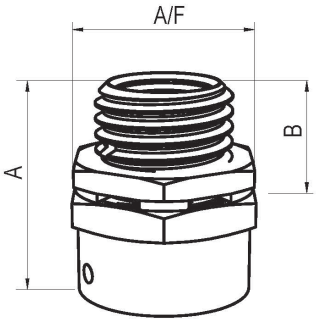

Dimensions

Size	A/F	Overall length (A)	Thread length (B)
M20	28.60	34.00 (min.)	17.00 (min.)
M25	34.90	34.00 (min.)	17.00 (min.)
½" NPT	34.90	32.00 (min.)	15.00 (min.)

Flameproof (Exd/Exe) breather drains - BD-U Series

Type BD-U

Redapt BD-U series of Exd "Flameproof" and Exe "Increased Safety" breather drains has a primary function of effectively draining any water present within the enclosure.

Alongside draining water, it also allows air in the enclosure to breathe with the surrounding atmosphere, minimizing moisture build-up; preventing condensation and potential damage to sensitive electric/electronic equipment housed within. Approved to the latest international standards, Redapt explosion-proof breather drains can be supplied with ATEX and IECEx hazardous area certificates.

Technical specification

Code of Protection Categories
ATEX: I M2, II 2 GD, Ex eb I/IIC Mb Gb, Ex d IIC Mb Gb, Ex tb IIIC Db
IECEx: Ex eb I/IIC Mb/Gb, Ex d IIC Mb/Gb, Ex tb IIIC Db
Compliance Standards
ATEX: EN 60079-0, EN 60079-1, EN 60079-7, EN 60079-31
IECEx: IEC 60079-0, IEC 60079-1, IEC 60079-7, IEC 60079-31
Certificate Details
ATEX: ITS16ATEX101338X
IECEx: IECEx ITS 16.0014X
EAC: RU C-GB.MIO62.B.06227
INMETRO: NCC 18.0165 X
Temperature
Temperature range dependent on O-ring used (supplied on metric only)
Interface O-ring material options:
Nitrile: -30°C to +80°C
EPDM: -50°C to +100°C
Neoprene: -40°C to +80°C
Viton: -20°C to +180°C
Silicone: -60°C to +180°C (supplied as standard for metric only)
Fluorosilicone: -60°C to +130°C
The maximum temperature is limited to +150°C
Ingress protection (IP):
IP66 when fitted in accordance to manufacturer's instructions (for bottom application only)
Part number:
Please refer to page 10 for part numbering system

Download certificates and documents here

Materials

- Brass CZ121
- 316 stainless steel

Plating options

- Electroless nickel
- Zinc
- Others on application

Threadforms

- Metric
- NPT*

Note: remove O-ring for NPT thread to thread engagement

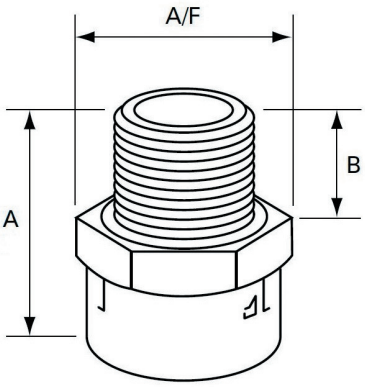

Dimensions

Size	Hex A/F	Overall length (A)	Male thread length (B)
M20	27.00	31.00	16.00
M25	31.75	31.00	16.00
½" NPT	27.00	35.00	20.00
¾" NPT	31.75	35.00	20.00

Male to female / female to female unions (Exde) - UN-U / UF-U Series

Type UN-U

Type UF-U

Redapt's range of Unions provides a method of matching electrical thread forms on hazardous area approved equipment whilst ensuring the integrity and Ex approval of the installation is maintained.

Manufactured as a three-piece assembly to facilitate easy in-line installation, Redapt's Unions provide a running joining whilst eliminating exposed threads and are particularly suitable for use where a coupler would impractical.
Designed for hazardous area applications and the range is certified to protection concepts Ex d "Flameproof" and Ex e "Increased Safety" for use in Zone 1 and Zone 2 applications. Also certified Ex tb "dust tight" for use in Zone 21 & 22 applications.

Materials

- Brass CZ121
- Mild steel
- 316 stainless steel
- Aluminium

Threadforms

- Metric
- NPT
- PG
- ISO pipe (BSP)
- ET

Plating options

- Electroless nickel
- Zinc
- Chromated
- Others on application

Technical specifications

Code of protection categories
ATEX: I M2/II 2 GD
IECEx: Ex db I/IIC Mb/Gb, Ex eb I/IIC Mb/Gb, Ex tb IIIC Db (Aluminium not mining)
CSA: Ex db / Ex eb IIC Gb IP54 Cl I Div1 Gr ABCD Cl II Gr EFG Cl III; Type 3
Compliance standards
ATEX: EN 60079-0, EN 60079-1, EN 60079-31
IECEx: IEC 60079-0, IEC 60079-1, IEC 60079-7, IEC 60079-31
CSA: CAN/CSA C22.2 No. 60079-0, No. 60079-1, No. 60079-7, ANSI/UL 60079-0, 60079-1, 60079-7, UL1203
Certificate details
ATEX: ITS16ATEX101339X
IECEx: IECEx ITS 16.0013X
EAC: TC RU C-GB.MIO62.B.06225
CSA: CSA01CA1248014X
INMETRO: NCC 18.0133 X
Temperature
-60°C to +200°C
Ingress protection (IP):
IP64 when fitted without sealing washer. IP66/IP68 when fitted with Oring or thread sealant according to manufacturer's instructions.
Part number:
Please refer to page 10 for part numbering system

Download certificates and documents here

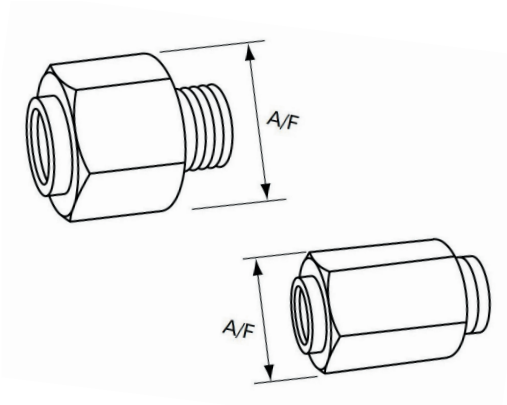

Dimensions

Male to female unions (UN-U)	
Size	**A/F**
M20	37.59
M25	42.42
M32	55.88
M40	55.88
M50	80.01
M63	90.17
M75	114.30

Female to female unions (UF-U)	
Size	**A/F**
M20	37.59
M25	42.42
M32	55.88
M40	55.88
M50	80.01
M63	90.17
M75	114.30

Earth lead (Exe) adaptors - AE-E Series

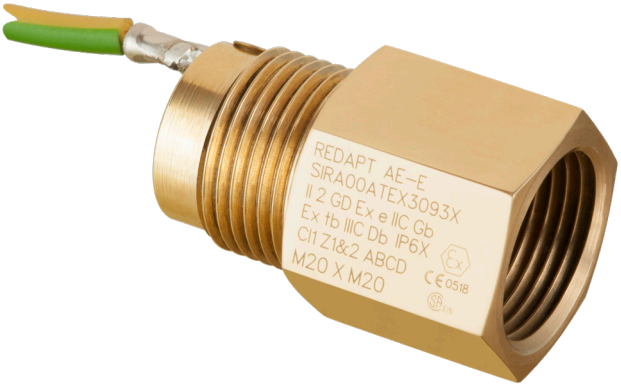

Type AE-E

Redapt AE-E series of earth lead adaptors provide a method of bonding a cable gland or conduit termination to a grounding point within an enclosure

Technical specifications

Code of protection categories
ATEX: I M2 / II 2GD, Ex eb I/IIC Mb/Gb, Ex tb IIIC Db (Aluminium not mining)
IECEx: Ex eb IIC Gb, Ex tb IIIC Db
CSA: Ex eb IIC Gb IP54; Cl I Zn 1 AEx eb IIC Gb IP54; Cl I Div2 Gr ABCD Cl II Gr EFG Cl III; Type 3
Compliance standards
ATEX: EN 60079-0, EN 60079-1, EN 60079-31
IECEx: IEC 60079-0, IEC 60079-7, IEC 60079-31
CSA: CAN/CSA C22.2 No. 60079-0, CAN/CSA C22.2, No. 60079-7, ANSI/UL 60079-0, ANSI/UL 60079-7
Certificate details
ATEX: ITS16ATEX101339X
IECEx: IECEx ITS 16.0013X
EAC: RU C-GB.MIO62.B.06225
CSA: CSA01CA1248014X
INMETRO: NCC 18.0133 X
Temperature
-20°C to +40°C
Ingress protection (IP):
IP64 when fitted without sealing washer. IP66/IP68 when fitted with Oring or thread sealant according to manufacturer's instructions.
Part number:
Please refer to page 10 for part numbering system

Download certificates and documents here

Materials

- Brass CZ121
- 316 stainless steel
- Aluminium
- Mild steel

Plating options

- Electroless nickel
- Zinc
- Chromated
- Others on application

Threadforms

- Metric
- NPT
- PG
- ISO pipe (BSP)
- ET

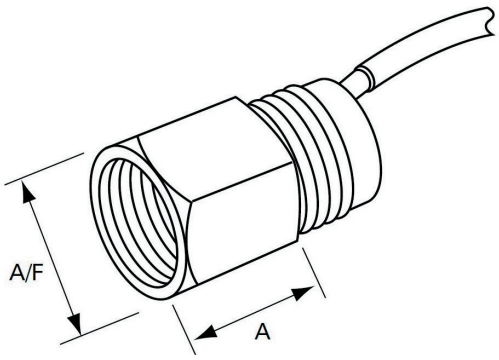

Dimensions

Size	Body length (A)	A/F
M16	21.50	23.37
M20	21.50	30.48
M25	21.50	37.59
M32	21.50	47.24
M40	21.50	55.88
M50	21.50	70.10
M63	21.50	90.17
M75	21.50	90.17

Non-certified accessories

A wide variety of non-certified accessories such as locknuts, washers and bushes are available to compliment the Redapt certified accessory range.

Materials include brass, stainless steel, aluminium, nylon, fibre and many others depending on product, with plating available on metallic finishes. A variety of threadforms are available.

For further information on our non-certified accessories, please consult the **Raxton thread conversion accessories** webpage.

Download certificates and documents here

For information on our flexible conduits, please consult the **Flexible conduits** webpages.

The safety you rely on.

Powering Business Worldwide

Eaton is a power management company.
We help our worldwide customers to manage energy they need for their buildings, their planes, car and trucks, their machines and their enterprises.

Our innovative technologies accompanies our customers effectively manage electrical, hydraulic and mechanical power more efficiently, safely and sustainably.
Eaton is dedicated to improving the quality of life and the environment through the use of power management technologies and services.

Eaton, with 2020 sales of $17.9 billion, has approximately 85,000 employees and sells products to customers in more than 175 countries.

Discover our product ranges on **Eaton.com**
Register to our contact database **here**

Eaton Electrical Systems Limited
Westgate, Aldridge
West Midlands WS9 8FS
United Kingdom

T: +44 (0) 1922 450 400
W: www.eaton.com/uk
E: csaldridge@eaton.com

Powering Business Worldwide

Publication No. CAP185004