NOZZLE SCHEDULE			
ITEM	QTY.	NAME	DESCRIPTION
N1	1	INLET	3" 600# RFSO ASME B16.5
N2	1	OUTLET	3" STD. WGT. PIPE
N3	1	DRAIN	1-1/2" NPT 3000# COUPLING

REV	DATE	CHANGE	ECR	BY	APP
A	12/08/03	NEW RELEASE	B892	LH	VA
B	11/1/05	REVISED TITLE BLOCK	D507	FM	LH

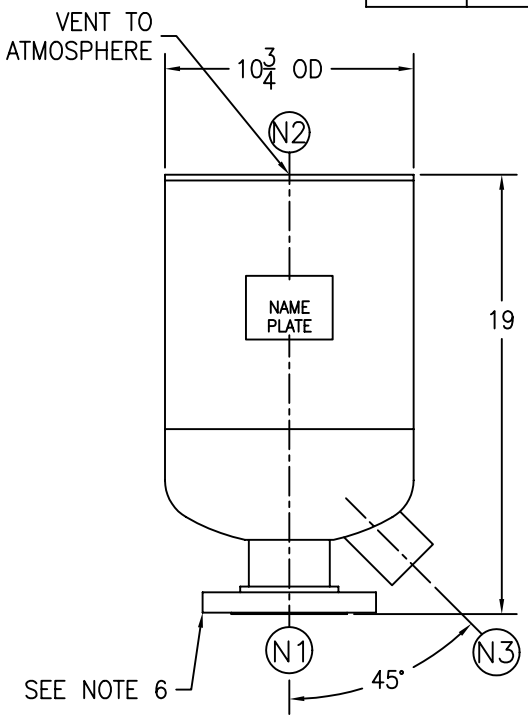

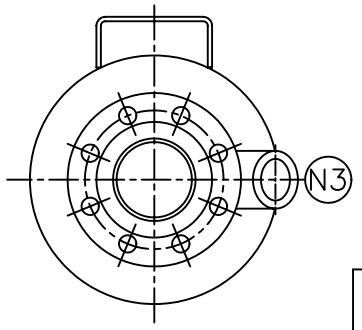

NOTES:

1. ALL DIMENSIONS ARE IN INCHES.
2. ALL BOLT HOLES ARE TO STRADDLE NATURAL CENTERLINES.
3. SHIPPING WEIGHT: 75 POUNDS.
4. DESIGN DATA:

DESIGN PRESSURE-	ATMOSPHERIC
DESIGN TEMPERATURE-	AMBIENT
CORROSION ALLOWANCE-	0 INCHES

5. MATERIAL: CARBON STEEL.
6. EXHAUST HEAD IS DESIGNED TO OPERATE AT ATMOSPHERIC PRESSURE. THE CLASS 600 POUND FLANGE IS PROVIDED SIMPLY TO MATCH CUSTOMER'S MATING FLANGE.

CUSTOMER:
REG. NO.:
P.O. NO.:
TAG NO.:
PART NO.: 3EHC-600

ELECTRONIC FILE NAME:
SD3EHC-600.DWG

TOLERANCES UNLESS OTHERWISE SPECIFIED PER ENGINEERING STANDARD ES- --

UNAUTHORIZED USE, MANUFACTURE OR REPRODUCTION IN WHOLE OR IN PART IS PROHIBITED. DRAWING, DESIGN AND OTHER DISCLOSURES PROPERTY OF EATON FILTRATION, LLC

EATON

EATON FILTRATION, LLC
900 FAIRMOUNT AVENUE, ELIZABETH, NEW JERSEY 07207

NAME 3" TYPE "40-EHMF" EXHAUST HEAD 600# FLG (CSTL)

DRAWN	LH	DATE	12/08/03	CHECKED	FM	DATE	12/08/03
APP	VA	DATE	12/08/03	SCALE	NTS	ECR	B892

SIZE	DWG NO	REV
A	SD3EHC-600	B

REV 10/96